ANBAUANLEITUNG

mounting instructions • instructions de montage • instrucciones de montaje • istruzioni di montaggio

BC.HTA.08.740.36100

beinhaltet • contains • contient • contiene • contiene

HTA.08.740.86100/B

BC.HTA.00.740.31000

BC.HTA.00.740.12200/B

SW-MOTECH®

Item number: **HTA.08.740.86100/B**	Revision: **00** · Date: **04 - 2026**

BLAZE panniers spacer bars

~ 0.75 h.	EASY DIFFICULT

ENGLISH ·Thank you for choosing this premium product from SW-MOTECH. Visit our online shop for more information (e.g. model assignments). Required documents (e.g. national type approval) are available there for you to download.

Please read and understand all the instructions, safety information and warnings in these mounting instructions before mounting and using the product in order to avoid injury and damage. Keep these mounting instructions for reference.

This product was developed for vehicles in factory condition. Compatibility with original accessories or accessories from other manufacturers cannot be guaranteed.

These mounting instructions have been prepared to the best of our current knowledge. No legal claims relating to accuracy can be made. Errors and omissions excepted. We reserve the right to make technical and design changes. The copyright is held by SW-MOTECH.

SAFETY WARNING SYMBOL

⚠ **This warning symbol is used in these mounting instructions to warn of deadly dangers, injuries or other hazards. The words DANGER, WARNING or CAUTION are used as part of this warning symbol to convey important safety messages and information relating to the installation and use of this product. These words, together with the safety warning symbol, mean:**

⚠ **DANGER:** Indicates a hazardous situation which, if not avoided, will result in death or serious injury!

⚠ **WARNING:** Indicates a hazardous situation which, if not avoided, may result in death or serious injury!

⚠ **CAUTION:** Indicates a hazardous situation which, if not avoided, may result in minor or moderate injury!

⚠ ***NOTE:*** Important information, but not relating to a risk of death or injury (property damage only)!

GENERAL INFORMATION

⚠ **WARNING: Assembly and/or maintenance of this product requires advanced technical skill, appropriate tools, and a good understanding of tool usage and torque specifications. For your own safety, SW-MOTECH recommends having the assembly and/or maintenance carried out by a qualified and certified motorcycle workshop.**

⚠ **WARNING: If you do choose to assemble this product yourself, carefully and fully read the mounting instructions before assembly and use, and follow all instructions to avoid serious injury or death. Also observe all relevant information in the vehicle manual when mounting or using the product. IF YOU DO NOT UNDERSTAND ANY PART OF THESE MOUNTING INSTRUCTIONS OR NEED AN EXPLANATION AS TO A SPECIFIC INSTRUCTION, DO NOT ATTEMPT TO INSTALL THIS PRODUCT WITHOUT CONSULTING SW-MOTECH FOR ASSISTANCE!**

PREPARATION: Read the mounting instructions carefully and make sure that all parts on the parts list are available.

⚠ **CAUTION: Ensure that your vehicle is standing securely. Switch off the engine and remove the ignition key. Allow the engine/exhaust to cool down if necessary. Disconnect the battery when working on the electrical system. Only use proper tools and always wear safety goggles and gloves during assembly and maintenance. Have a second person help you with assembly and maintenance.**

ASSEMBLY: All parts and connections removed from the vehicle must be reinstalled according to the vehicle manufacturer's specifications or replaced with parts and hardware supplied by SW-MOTECH.

⚠ **WARNING: Secure all threads with a medium-strength liquid threadlocker, unless otherwise specified.**

⚠ **DANGER: Tightening torques not defined by SW-MOTECH must be obtained from the vehicle manufacturer or a certified motorbike workshop.**

FUNCTIONAL CHECK: After mounting the product, ensure that no moving parts are obstructed and that the function of the vehicle is not impeded. Cables and hoses must not rub against each other and/or be hindered in any way.

⚠ **WARNING: Carry out a comprehensive functionality check before you start to drive. Check the tightening torque of all connections and the tight fit of the product after the first 50 km and then at regular intervals. Mounted accessories can change the handling and stability of the vehicle.**

SW-MOTECH GmbH & Co. KG
Ernteweg 7-10
35282 Rauschenberg
Germany

info@sw-motech.com
www.sw-motech.com

The content translation is automated.
© SW-MOTECH GmbH & Co. KG

Errors and omissions excepted
Subject to technical and design changes.

Take note of the symbols and what they mean in the ASSEMBLY section. If the term OEM appears in the ASSEMBLY section, the vehicle manufacturer's specifications must be observed and applied.

If you have any questions, please don't hesitate to contact our Customer Service team or our distributors. You can find our telephone number and a list of our distributors in our online shop:
www.sw-motech.com

Do not use thread lock: Indicates that no liquid thread lock should be used at this point.

Tighten/note the tightening torque information: Indicates the tightening torque of a part specified by SW-MOTECH or the vehicle manufacturer (OEM).

Use thread locker: Indicates that a thread must be coated with liquid thread locker. H (HIGH): high strength; M (MEDIUM): medium strength; L (LOW): low strength.

The content translation is automated.
© SW-MOTECH GmbH & Co. KG

Errors and omissions excepted
Subject to technical and design changes.

1

1	2	3	4	5
HTA.08.740.029L.11	HTA.08.740.029R.11	HTA.00.740.033L.02	HTA.00.740.033R.02	M5 x 8; ISO 7380 SC.A2.05.008.01.7380.M3
1/1	1/1	1/1	1/1	4/4

2

6	7	8	9	10	11
HTA.08.740.A38L.01	HTA.08.740.A38R.01	KES.RD.150.0200.02.GL	HTA.00.740.532.01	HTA.00.740.531.01	M5 x 16; DIN 6912 SC.ST.05.016.02.6912.088
1/1	1/1	2/2	1/1	1/1	4/4

12
M5; DIN 985 MU.A4.05.01.985.70
4/4

3

13	14	15	16	17
M5 x 12; ISO 7380 SC.A2.05.012.01.7380.M3	HTA.22.740.005.11	M5 x 16; ISO 7380 SC.ST.05.016.02.7380.109	ø 5,3; DIN 9021 US.A2.053.01.9021	M5; DIN 6927 MU.ST.05.02.6927.08
2/2	2/2	2/2	2/2	2/2

5

18	19	20	21	22
M8 x 45; DIN 6912 SC.ST.08.045.02.6912.109	M8 x 35; DIN 6912 SC.ST.08.035.02.6912.088	Ø 20 / ø 8,4 / h 3 DB.ST.0200.0084.0030.48	Ø 20 / ø 8,4 / h 10 DB.ST.0200.0084.0100.48	Ø 25 / ø 8,4 / h 4 DB.ST.0250.0084.0040.48
2/2	2/2	2/2	2/2	4/4

The content translation is automated.
© SW-MOTECH GmbH & Co. KG

Errors and omissions excepted
Subject to technical and design changes.

1

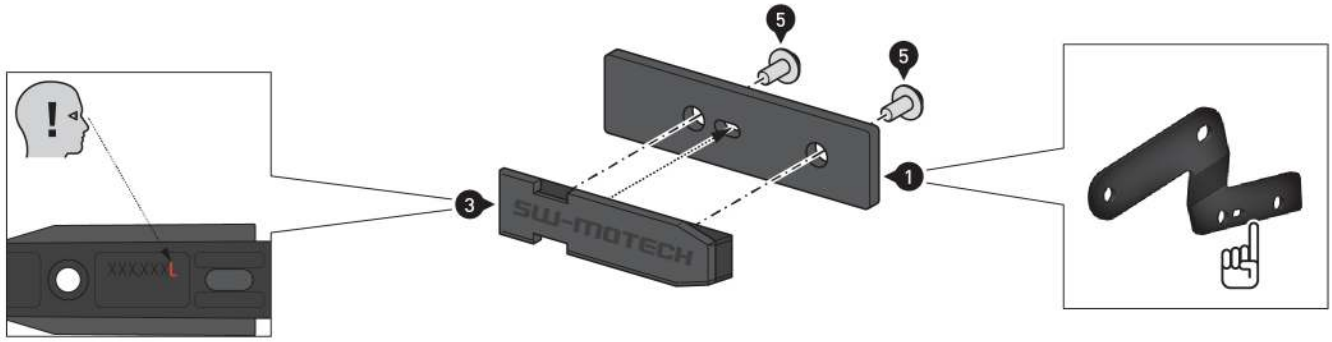

⚠ WARNING: Always wear eye and hand protection!
⚠ WARNING: Always use suitable tools!

⚠ ***NOTE:*** *The following installation steps show installation on one side of the vehicle only. Repeat the installation steps on the other side of the vehicle unless otherwise stated.*

⚠ ***NOTE:*** *The illustration of the mounting bracket (1) serves as an example. Screw the connector support rails (3/4) onto the side of the mounting bracket (1/2) marked in the illustration.*

Screw the plug holder rail (3) to the **L mark** on the mounting bracket (1).
Then screw the plug holder rail (4) to the **R mark** on the mounting bracket (2).
Tighten the screws (5) as specified in the mounting instructions.
⚠ CAUTION: Overtightening the screws (5) will damage the plastic parts.

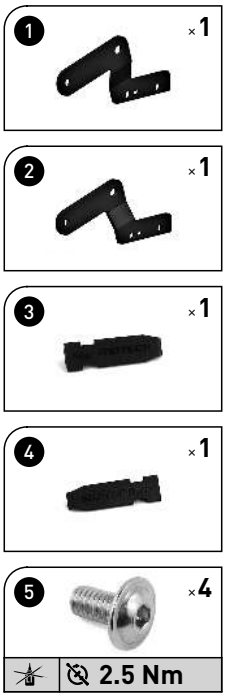

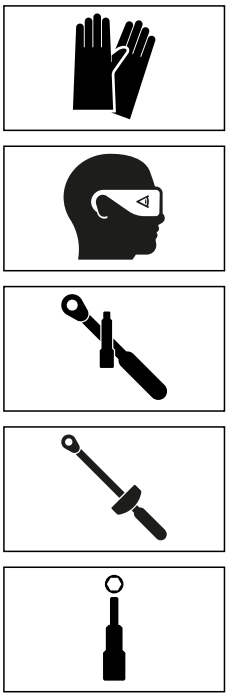

2

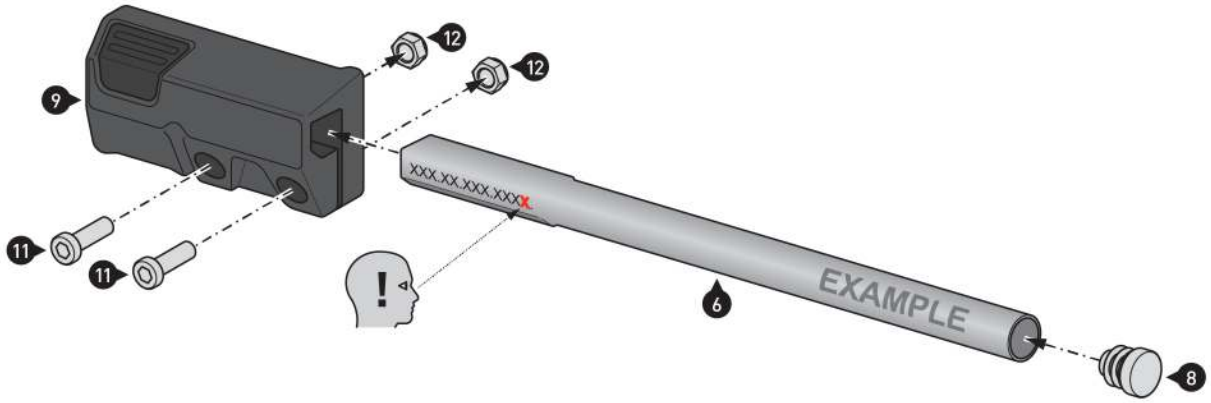

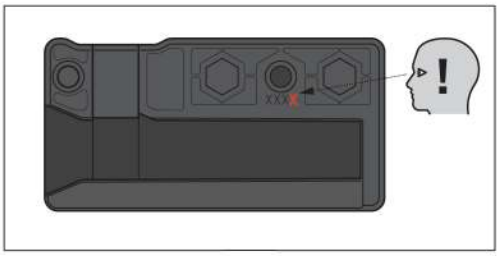

Insert the plastic plugs (8) into the ends of the spacer brackets (6/7).

Then insert the spacer bracket (6) with the **L mark** into the opening of the connector (9) with the **R mark**. Insert the spacer bracket (7) with the **R mark** into the opening of the connector (10) with the **L mark**.

Tighten the screws (11) as specified in the mounting instructions.
⚠ CAUTION: Overtightening the screws (11) will damage the plastic parts.
⚠ WARNING: Check that the spacer brackets (6/7) are firmly in place.

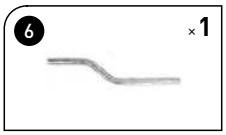

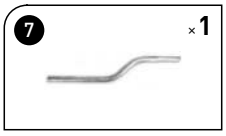

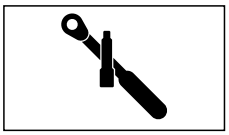

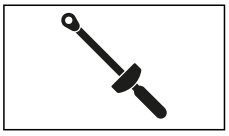

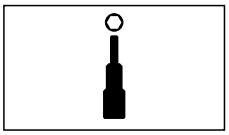

The content translation is automated.
© SW-MOTECH GmbH & Co. KG

Errors and omissions excepted
Subject to technical and design changes.

3

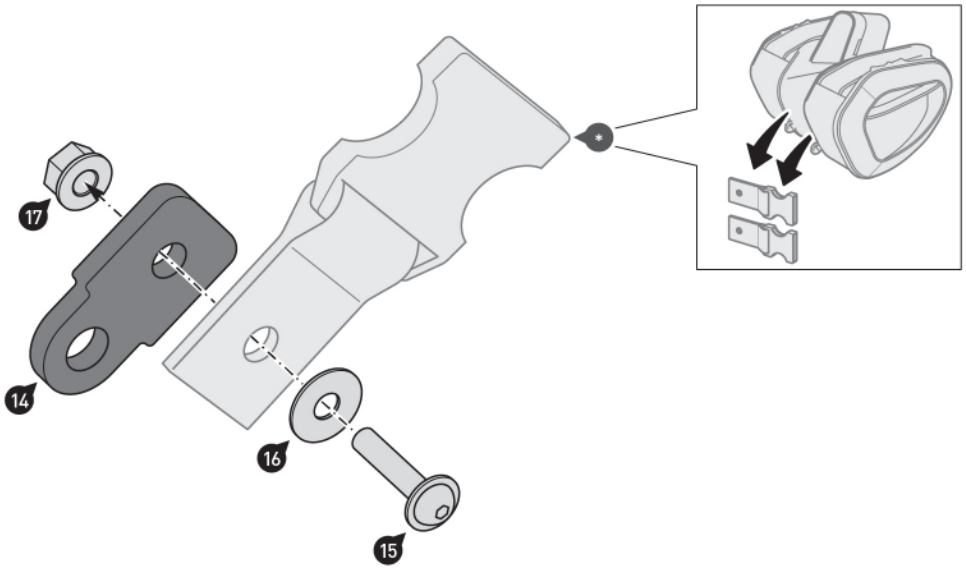

⚠ ***NOTE:*** *The (13) screws are not needed!*

Remove the buckles (•) from your saddlebags.

Screw the buckles (•) to the (14) mounting brackets.
Do not tighten the screws (15) yet.

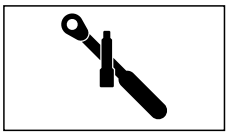

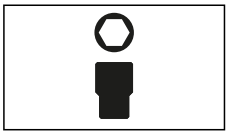

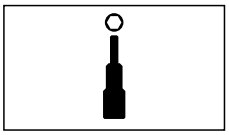

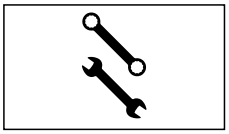

The content translation is automated.
© SW-MOTECH GmbH & Co. KG

Errors and omissions excepted
Subject to technical and design changes.

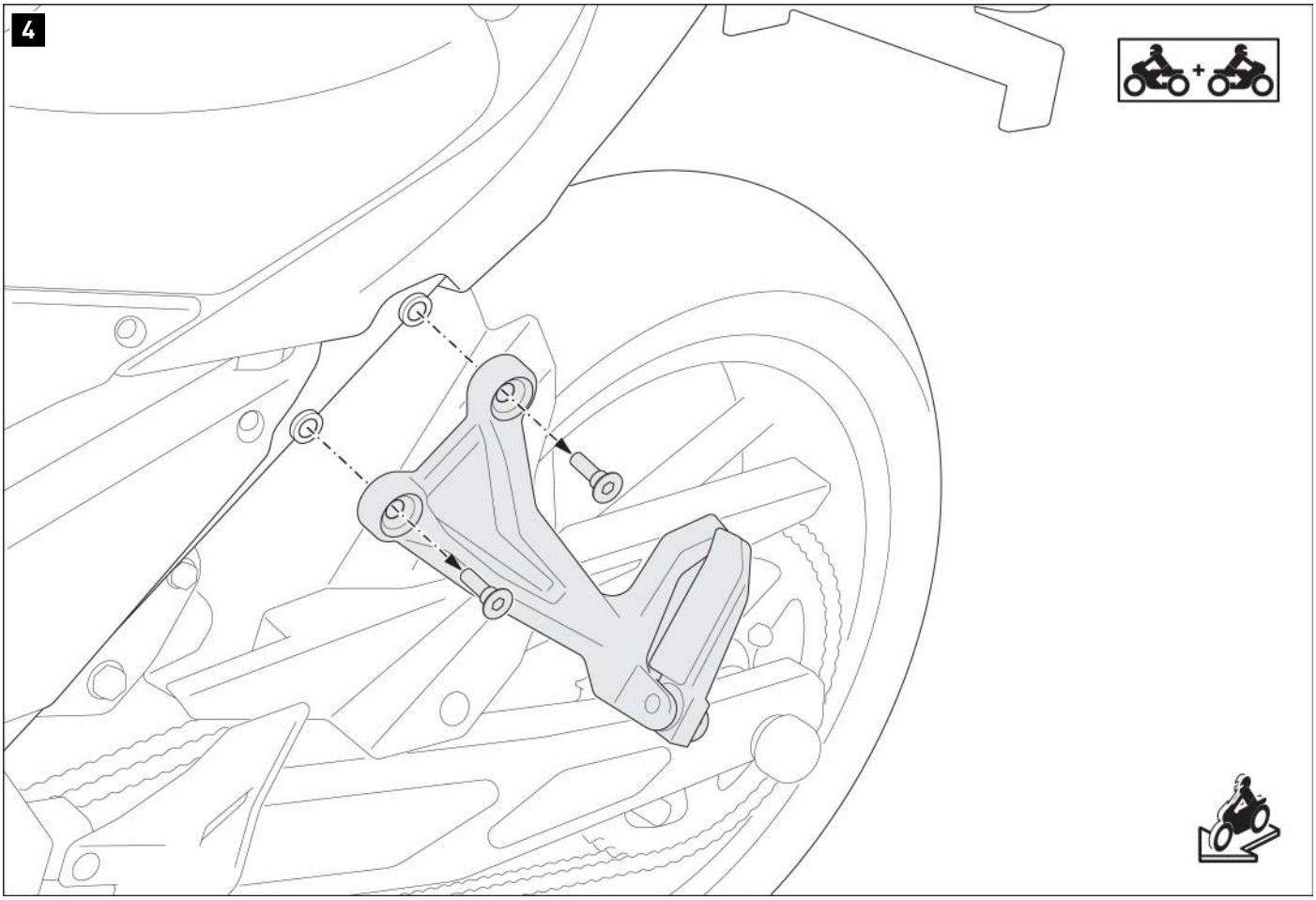

Remove the original screws shown **on both sides** and the passenger footrest bracket from the vehicle.

The content translation is automated.
© SW-MOTECH GmbH & Co. KG

Errors and omissions excepted
Subject to technical and design changes.

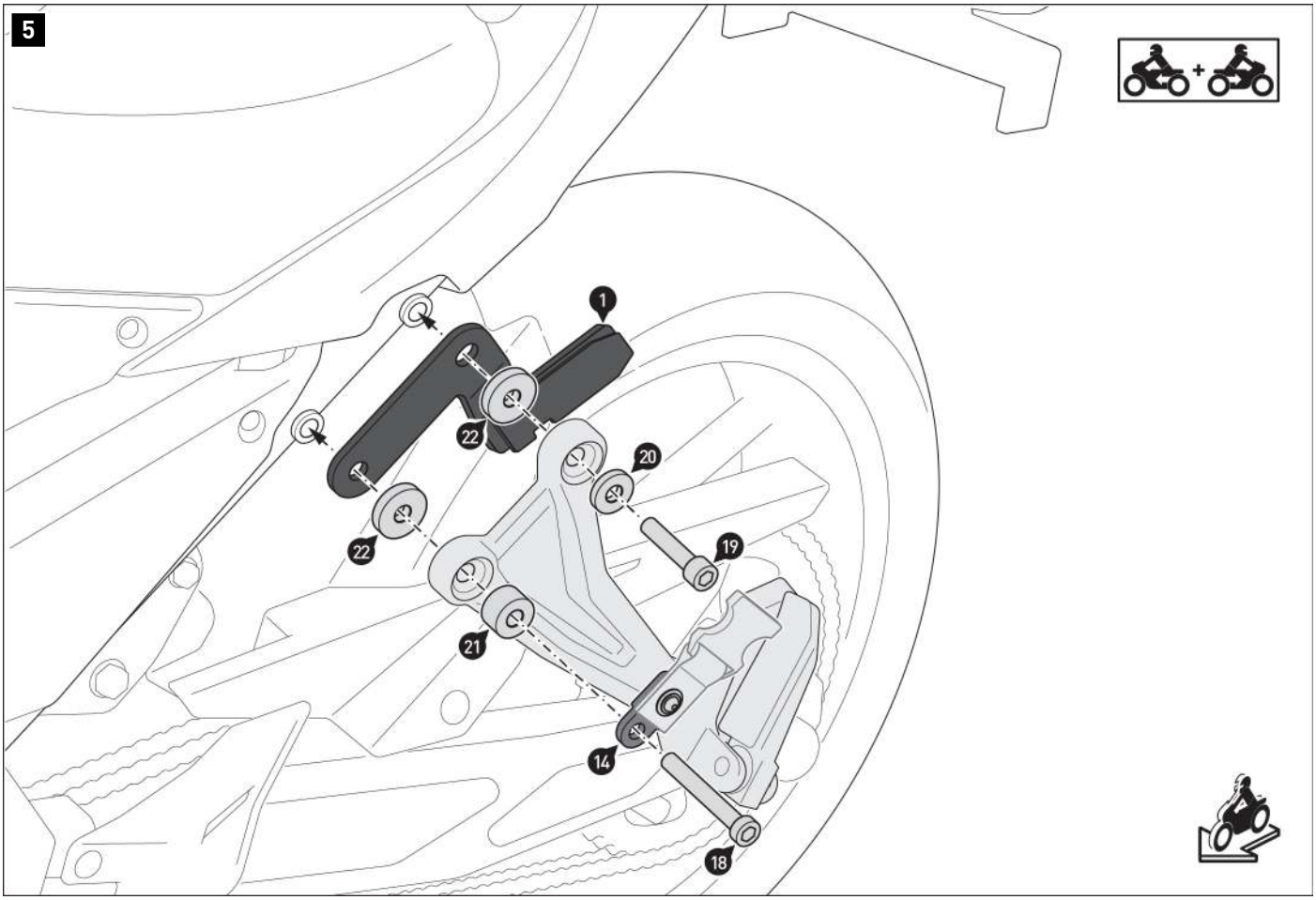

Screw the (1/2) mounting brackets to the passenger footrest holders **on both sides** of the vehicle.
⚠ WARNING: Use liquid threadlocker!
Tighten screws (14) and (18) according to the bike manufacturer's specifications.

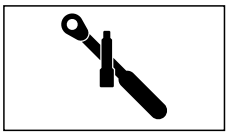

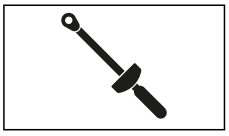

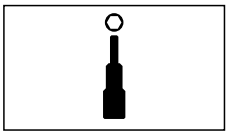

The content translation is automated.
© SW-MOTECH GmbH & Co. KG

Errors and omissions excepted
Subject to technical and design changes.

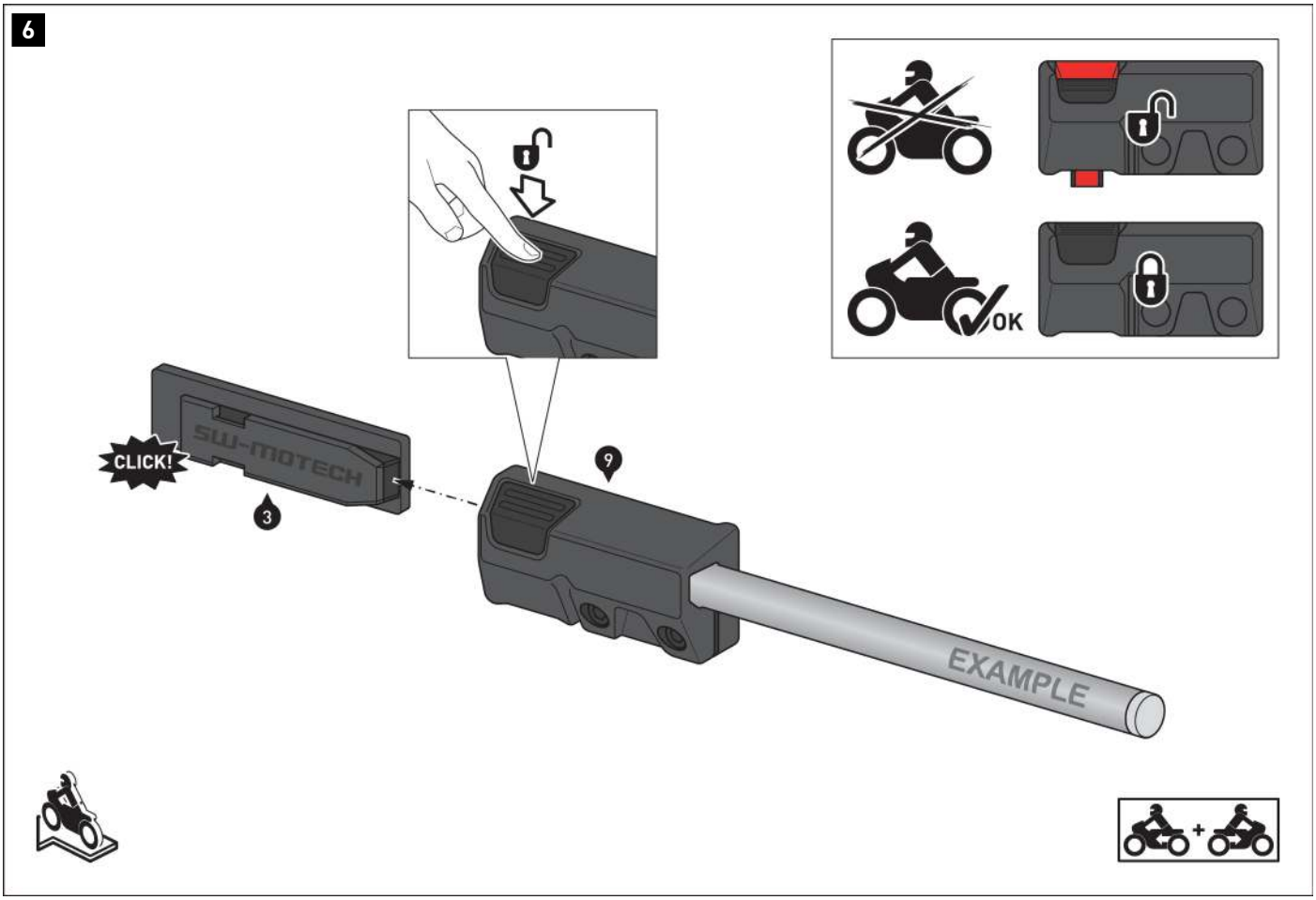

Slide the connectors (9/10) onto the connector rails (3/4) on both sides.
⚠ CAUTION: Listen for the clearly audible click when the lock is engaged. Also make sure that the red warning areas of the release buttons are not visible. Otherwise, the lock cannot be guaranteed (see detailed drawing).

⚠ WARNING: The mounting instructions enclosed with the saddlebags must be followed before attaching the saddlebags to the support arms!

AFTER attaching the saddlebags, tighten the screws (15) on both sides as specified in the mounting instructions.

⚠ WARNING: Check that all components are securely attached before starting your ride. Remove the (9/10) connectors from the bike when riding WITHOUT saddlebags.

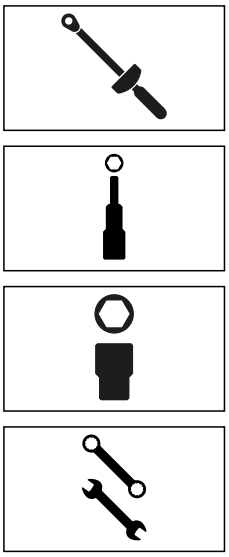

© SW-MOTECH GmbH & Co. KG

Errors and omissions excepted
Subject to technical and design changes.

PRODUCT-SPECIFIC NOTES

⚠ WARNING: Please follow the installation instructions included with the saddlebags.
⚠ ***NOTE:*** *Observe the country-specific regulations for the registration/operation of your vehicle and any applicable TÜV regulations. Have any parts requiring registration entered in the vehicle documents by your inspection centre after they have been installed.*

© SW-MOTECH GmbH & Co. KG

Errors and omissions excepted
Subject to technical and design changes.

Art.-Nr. / Item No.: **BC.HTA.00.740.3000*** & **BC.HTA.00.740.3100*** Revision: **00** · Datum / Date: **09 - 2020**

PRO BLAZE® Satteltaschen
PRO BLAZE® Satteltaschen hohe Version

DEUTSCH - Vielen Dank, dass Sie sich für dieses Premium-Produkt von SW-MOTECH entschieden haben. Bitte besuchen Sie unseren Webshop für weitere Informationen wie Modellzuweisungen und PDF-Anbauanleitung. Erforderliche Dokumente (z. B. ABE) stehen als Download zur Verfügung.

Die Montage und/oder Wartung dieses Produkts erfordert ein gutes technisches Verständnis! Zu Ihrer eigenen Sicherheit empfiehlt SW-MOTECH, die Montage und/oder Wartung durch eine Fachwerkstatt durchführen zu lassen! SW-MOTECH übernimmt keine Haftung für Schäden, die durch eine unsachgemäße Montage und/oder Wartung verursacht wurden!
Beachten Sie alle in der Anbauanleitung angegebenen Hinweise und die für die Montage relevanten Informationen im Fahrzeughandbuch. Nichtbeachtung kann zu Schäden am Fahrzeug bzw. zur Gefährdung des Fahrers führen! Diese Anbauanleitung ist nach unserem derzeitigen Kenntnisstand verfasst worden. Rechtliche Ansprüche auf Richtigkeit bestehen nicht.

Dieses Produkt wurde für Fahrzeuge im Werkszustand entwickelt. Die Kompatibilität mit Original-Zubehörteilen bzw. den Zubehörteilen anderer Hersteller kann nicht gewährleistet werden. Stellen Sie des Weiteren VOR Montage dieses Produkts sicher, dass sich alle beweglichen Teile (z. B. die Kette) im ursprünglichen Wartungszustand befinden. Montiertes Zubehör kann das Fahrverhalten und/oder die Stabilität Ihres Fahrzeugs verändern.

ALLGEMEINE HINWEISE

Beachten Sie die landesspezifischen Vorschriften für Zulassung/Betrieb Ihres Fahrzeugs bzw. anwendbare TÜV-Vorschriften. Lassen Sie eintragungspflichtige Teile nach Montage durch Ihre Prüfstelle in die Fahrzeugpapiere eintragen.

VORBEREITUNG: Lesen Sie die Anbauanleitung aufmerksam und stellen Sie sicher, dass alle Teile der Stückliste vorhanden sind. Achten Sie darauf, dass Ihr Fahrzeug sicher steht und nicht umfallen kann. Schalten Sie den Motor ab und ziehen Sie den Zündschlüssel. Lassen Sie ggf. den Motor/Auspuff abkühlen. Klemmen Sie bei Arbeiten an der Elektrik die Fahrzeugbatterie ab. Verwenden Sie geeignetes Werkzeug. Lassen Sie sich von einer zweiten Person helfen.

FUNKTIONSKONTROLLE: Prüfen Sie nach der Befestigung die uneingeschränkte Freigängigkeit und einwandfreie Funktion aller Fahrzeugteile. Leuchtmittel wie Rücklicht und Blinker dürfen nicht in ihrer Funktion eingeschränkt werden. Kabel, Züge und Schläuche dürfen nicht scheuern und/oder geklemmt werden. Führen Sie vor Fahrtbeginn eine umfassende Funktionskontrolle durch.

ACHTUNG: Überprüfen Sie vor Fahrtbeginn und bei jeder Rast (alle 200 km) den ordnungsgemäßen Sitz des Produkts!

ACHTUNG: Die Kompatibilität mit Zubehör-Auspuffanlagen kann nicht gewährleistet werden!
Stellen Sie sicher, dass keine Komponente des Produkts mit heißen und beweglichen Teilen des Fahrzeugs in Berührung kommen kann. Achten Sie darauf, dass alle Komponenten mindestens 5 cm Abstand zu heißen Teilen sowie dem heißen Abgasstrom des Auspuffs haben. Federn Sie zu diesem Zweck nach der Montage das Fahrzeug mehrere Male im Stand voll durch.

PRODUKTSPEZIFISCHE HINWEISE

ACHTUNG: Das Fahr-/Bremsverhalten des Motorrads verändert sich nach Befestigung dieses Produkts merklich! Die Schräglagen- und Bodenfreiheit kann durch dieses Produkt eingeschränkt werden!

ACHTUNG: Veränderungen führen zum Erlöschen der Garantie.

Maximale Zuladung	Höchstgeschwindigkeit
5 KG (11 lbs)	130 km/h (80 mph)

ACHTUNG: Es gilt die vom Fahrzeughersteller genannte maximale Zuladung des Fahrzeugs!

ACHTUNG

NICHT FÜR DEN OFFROAD-EINSATZ GEEIGNET!

PRO BLAZE® saddlebags
PRO BLAZE® saddlebags high version

ENGLISH - Thank you for choosing this premium product from SW-MOTECH. Please visit our webshop for additional information, such as application charts and PDF mounting instructions. Any other documents that may be required (e.g. ABE certifications), are also available for download at our webshop.

Installation and/or maintenance of this product require good technical understanding! For your own safety SW-MOTECH recommends having installation and/or servicing carried out by a specialist workshop! SW-MOTECH assumes no liability for damage caused by improper installation and/or maintenance work!
Carefully follow all the directions given in the mounting instructions and pay attention to all relevant information in the vehicle manual during assembly. Nonconformance can lead to vehicle damage or even endanger the driver! These mounting instructions are written based on our current state of knowledge. Legal requirements for accuracy do not exist.

This product was developed for vehicles in their factory setting. Compatibility with original accessory parts or other manufacturers' accessory parts is not guaranteed. Furthermore, BEFORE installing this product, make sure that all moving parts (e.g. the chain) are in the original state of maintenance. Installed accessories can change the driving behaviour and/or stability of your vehicle.

GENERAL INFORMATION

Observe the country-specific regulations concerning vehicle registration/operation as well as TÜV regulations if applicable. If required, register installed parts in the vehicle documents through an appropriate inspection authority.

PREPARATION: Read the mounting instructions carefully and make sure that all items of the parts list are included. Make sure that your vehicle is parked safely and cannot fall over. Turn off the engine and remove the ignition key. Let the motor/exhaust cool off if necessary. Disconnect the vehicle battery when working on the electrical system. Use appropriate tools. Have another person to help you.

FUNCTION CHECK: After fixation also make sure that no moving parts are obstructed and the function of the vehicle is not hindered in any way. Lamps as taillight and turn signals must not be limited in their function. Cables and hoses must not rub and/or be pinched. Before starting to ride, perform a comprehensive check of all functions.

ATTENTION: Before riding and at each stop (every 200 km) check proper fixation of the product!

ATTENTION: Compatibility with accessory exhaust systems cannot be guaranteed!
All components of the product must not contact any hot or moving parts of the vehicle. All parts should also remain 5 cm away from hot parts of the vehicle and remain clear of the exhaust stream. For this reason compress the suspension fully several times with your vehicle stationary.

PRODUCT SPECIFIC INFORMATION

ATTENTION: Riding with this product may affect the motorcycles driving and braking performance! Cornering and ground clearance can be reduced by using this product!

ATTENTION: Modifications will void any warranty.

Maximum Load	Maximum Speed
5 KG (11 lbs)	130 km/h (80 mph)

ATTENTION: The maximum vehicle load specified by the manufacturer must not be exceeded!

ATTENTION

NOT FOR OFFROAD-USE!

Konfektionierung durch / Packed by:	Datum der Konfektionierung / Date of packaging:

SW-MOTECH®

SW-MOTECH GmbH & Co. KG
Ernteweg 7-10
35282 Rauschenberg
Germany

Tel. / phone + 49 (0)6425 / 8168 - 050
Fax / fax + 49 (0)6425 / 8168 - 10

info@sw-motech.com
www.sw-motech.com

Copyright by
SW-MOTECH GmbH & Co. KG

Irrtümer und Änderungen vorbehalten. Technische und Design-Änderungen vorbehalten.
Errors and omissions excepted. Technical and design modifications are subject to change.

STÜCKLISTE / PARTS LIST

Schritt Step	Nr. No.	Art.-Nr. / Bezeichnung [a] Item No. / Description [a]	Artikel	Part	Anzahl [b] Quantity [b]	N·m [c]
		BC.HTA.00.740.3000*	***PRO BLAZE® Satteltaschen***	***PRO BLAZE® Saddlebags***		
1	(1)	BC.ZUB.00.019.30000	Klickverschluss	Buckle	**2** /2	
	(2)	LSF.350.250	Lackschutzfolie; 250 x 350 mm	Protection Foil; 250 x 350 mm	**2** /2	
2	(3)	BC.HTA.00.740.901.01 / 902.01	Satteltasche; links / rechts	Saddlebag; left / right	**2** /2	
3	(4)	BC.ZUB.00.064.30000	Wasserdichte Innentasche	Waterproof Innerbag	**2** /2	
		BC.HTA.00.740.3100*	***PRO BLAZE® Satteltaschen hohe Version***	***PRO BLAZE® Saddlebags high version***		
1	(1)	BC.ZUB.00.019.30000	Klickverschluss	Buckle	**2** /2	
	(2)	LSF.350.250	Lackschutzfolie; 250 x 350 mm	Protection Foil; 250 x 350 mm	**2** /2	
2	(3)	BC.HTA.00.740.901.02 / 902.02	Satteltasche; links / rechts	Saddlebag; left / right	**2** /2	
3	(4)	BC.ZUB.00.064.30000	Wasserdichte Innentasche	Waterproof Innerbag	**2** /2	

8.8	Regelgewinde / Coarse Thread **Ø**	**M4**	**M5**	**M6**	**M8**	**M10**	**M12**
	Stahl FK 8.8 / Steel CL 8.8 **N·m**	2,8	5,5	9,6	23	46	79

10.9	Regelgewinde / Coarse Thread **Ø**	**M4**	**M5**	**M6**	**M8**	**M10**	**M12**
	Stahl FK 10.9 / Steel CL 10.9 **N·m**	4,1	8,1	14	34	67	115

Anmerkungen: [a] Alle Maßangaben in Millimeter. [b] Der zweite Wert gibt die Gesamtanzahl des jew. Artikels in der Lieferung an. [c] **Keine Anzugsmomentvorgabe: Verwenden Sie das vom Fzg.-Hersteller definierte Anzugsmoment!** Das Std.-Anzugsmoment der Tabelle kann verwendet werden, wenn es den Fzg.-Hersteller-Vorgaben entspricht.

Note: [a] All measurements in millimeters. [b] The second number indicates the total quantity of the part in the delivery. [c] **No torque specifications: Use the torque defined by vehicle manufacturer!** The standard torque in this table can be used as long as it is within the vehicle manufacturer's specifications.

1

2

3

Copyright by
SW-MOTECH GmbH & Co. KG

Irrtümer und Änderungen vorbehalten. Technische und Design-Änderungen vorbehalten.
Errors and omissions excepted. Technical and design modifications are subject to change.

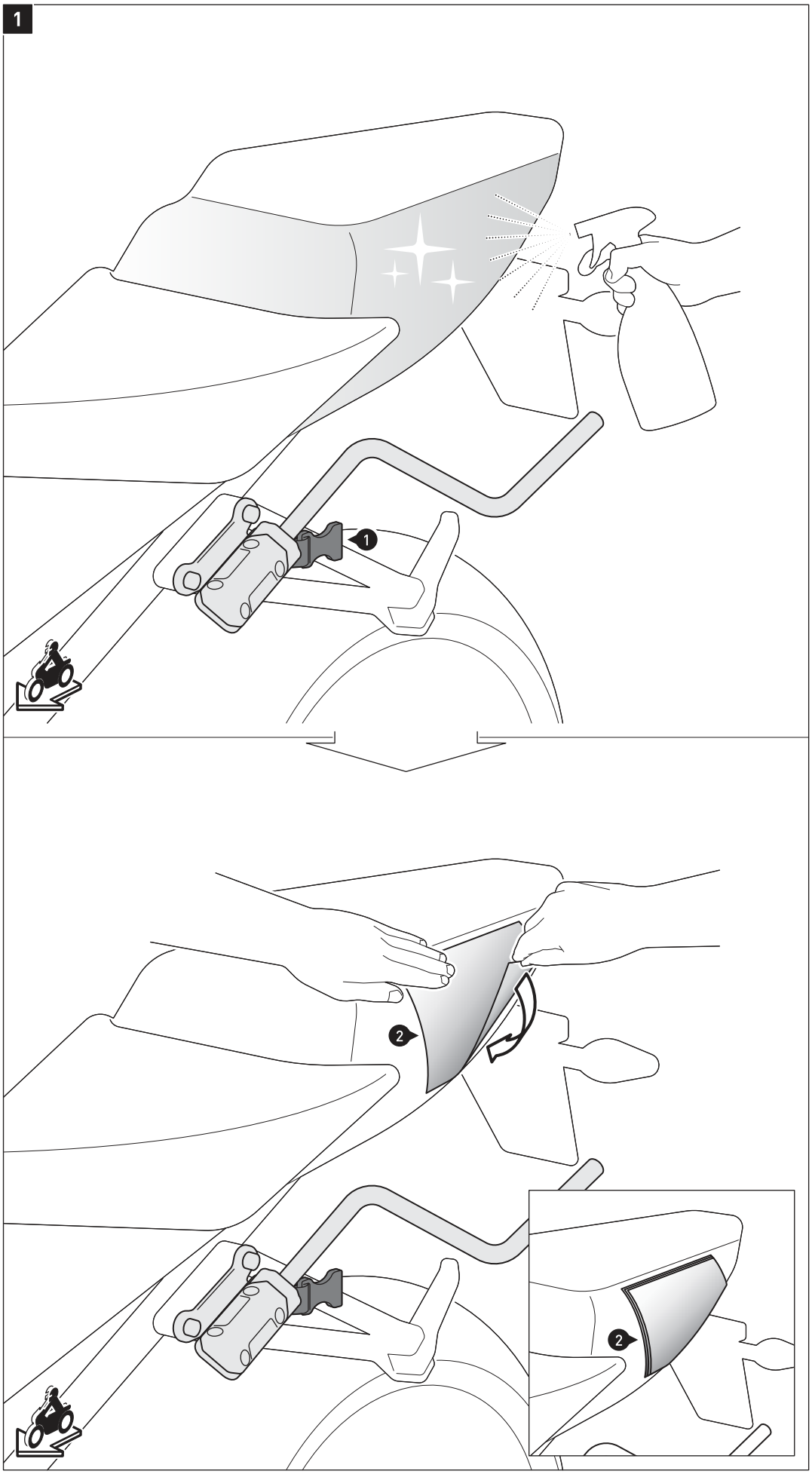

DE - Nachdem Sie die Abstandsbügel an Ihrem Fahrzeug montiert haben, müssen Sie die Auflageflächen der Satteltaschen mit der beigepackten Lackschutzfolie (2) bekleben, um Beschädigungen zu vermeiden. Reinigen Sie die zu beklebende Fläche vor dem Aufbringen der Lackschutzfolie gründlich von Fett- und Schmutzrückständen.
ACHTUNG: Scharfkantige Ecken müssen mit mehreren Schichten der Lackschutzfolie beklebt werden!

Prüfen Sie nach Anbringung der Satteltaschen, ob die betroffenen Fahrzeugbereiche ausreichend gegen Abrieb geschützt sind.

EN - After mounting the saddlebags frames you need to protect the surface of the motorcycle against scratches with the included protection foil (2).
Clean the surface from grease and dirt before applying the protection film.
ATTENTION: Sharp edges have to be covered with several layers of the protection foil!

After mounting the saddle bags, check if the affected parts of the vehicle are sufficiently protected against abrasion.

FR - Après avoir fixé les sacoches, vous devez protéger le revêtement de la moto contre les rayures en utilisant le film de protection fourni (2). Nettoyer la surface de toute trace de gras ou de salissure avant d'appliquer le film de protection.
ATTENTION : Les angles pointus doivent être recouverts de plusieurs couches de film de protection !

Après le montage des sacoches, vérifiez que les pièces concernées de la moto sont suffisamment protégées contre l'abrasion.

ES - Tras montar la estructura de las alforjas, se debe proteger la superficie de la motocicleta de posibles ralladuras con las lámina protectora que se incluye (2). Limpie la grasa y suciedad de la superficie antes de aplicar la película protectora.
ATENCIÓN: Los bordes afilados se deben cubrir con varias capas de lámina protectora.

Tras montar las bolsas, compruebe que las partes del vehículo afectadas están suficientemente protegidas contra abrasiones.

IT - Dopo il montaggio dei telai delle borse è necessario proteggere la superficie della moto contro graffi con la pellicola di protezione fornita in dotazione (2). Pulire la superficie da grasso e sporco prima di applicare la pellicola di protezione.
ATTENZIONE: in caso di presenza di spigoli vivi, questi devono essere coperti con più strati di pellicola protettiva!

Dopo aver montato le borse, verificare che le parti del veicolo interessate siano sufficientemente protette contro l'abrasione.

Copyright by
SW-MOTECH GmbH & Co. KG

Irrtümer und Änderungen vorbehalten. Technische und Design-Änderungen vorbehalten.
Errors and omissions excepted. Technical and design modifications are subject to change.

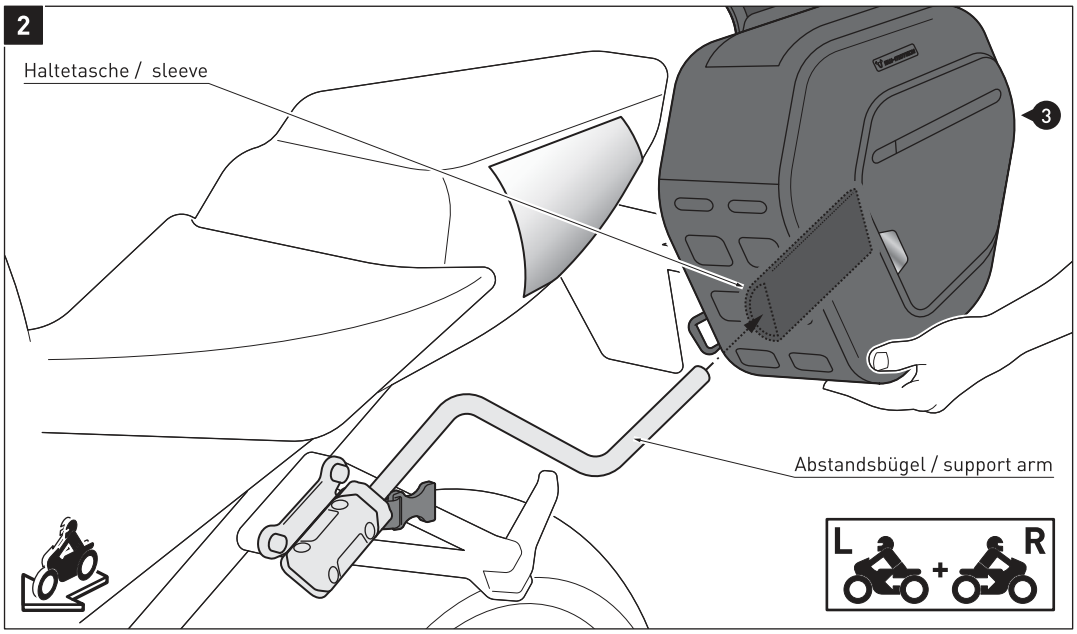

Schieben Sie die Haltetaschen der Satteltaschen (3) **beidseitig** über die zuvor montierten Abstandsbügel.

Slide the pannier sleeves of the saddlebags (3) on **both sides** onto the mounted support arms.

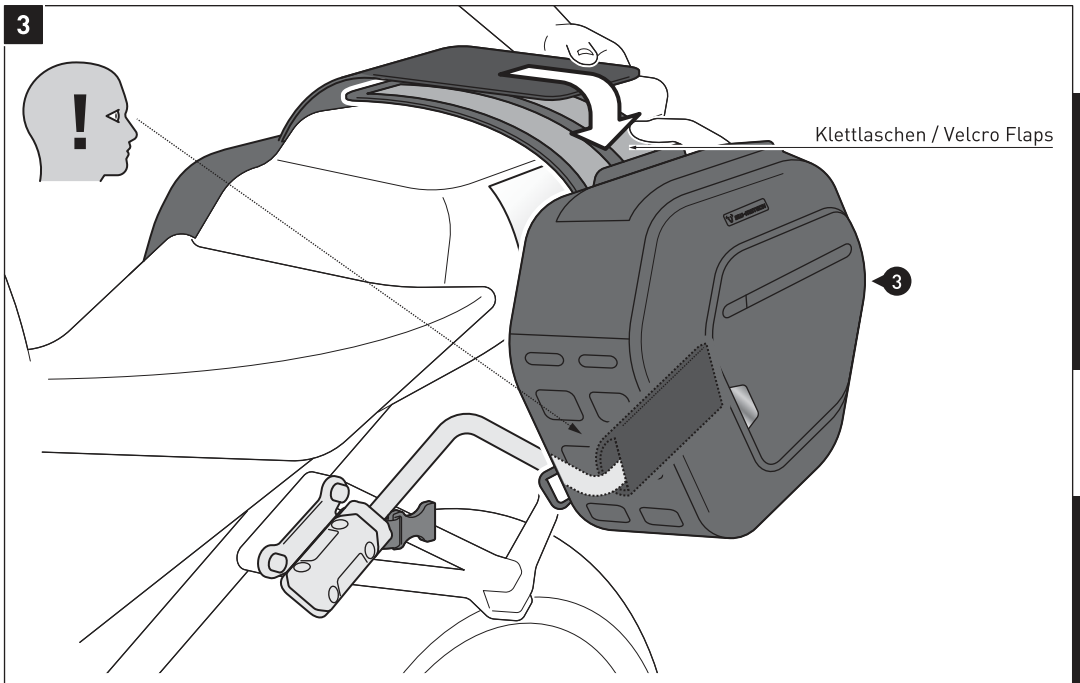

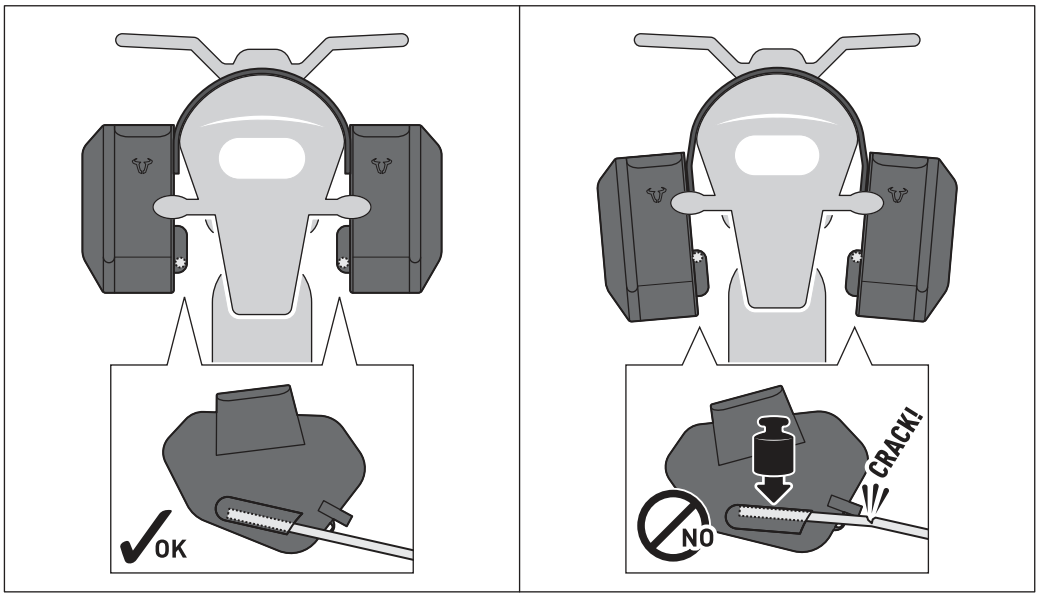

Verkletten Sie die Klettlaschen der Satteltaschen (3) über das Heck (Sozius-Sitz) des Fahrzeugs, wie in der Zeichnung gezeigt.

ACHTUNG: Achten Sie unbedingt darauf, dass nach dem Beladen der Satteltaschen (3) KEINE Last auf den Abstandbügeln liegt!
Die Lastaufnahme darf ausschließlich über die Klettlaschen der Satteltaschen (3) erfolgen, NIEMALS über die Abstandsbügel!
Die Abstandsbügel müssen nach Beladung wie in der Detailzeichnung gezeigt in den Haltetaschen positioniert sein!

Fasten the saddlebags (3) with the velcro flaps over the rear (passenger seat) of the motorcycle, as shown in the drawing.

ATTENTION: Make sure after loading the saddlebags (3) there is NO weight on the saddlebags frames!
The weight of the saddlebags (3) must be supported by the velcro flaps, NEVER by the saddlebags frames.
After loading, the saddlebags frames must be positioned in the saddlebags sleeves, as shown in the detail drawing!

Copyright by
SW-MOTECH GmbH & Co. KG

Irrtümer und Änderungen vorbehalten. Technische und Design-Änderungen vorbehalten.
Errors and omissions excepted. Technical and design modifications are subject to change.

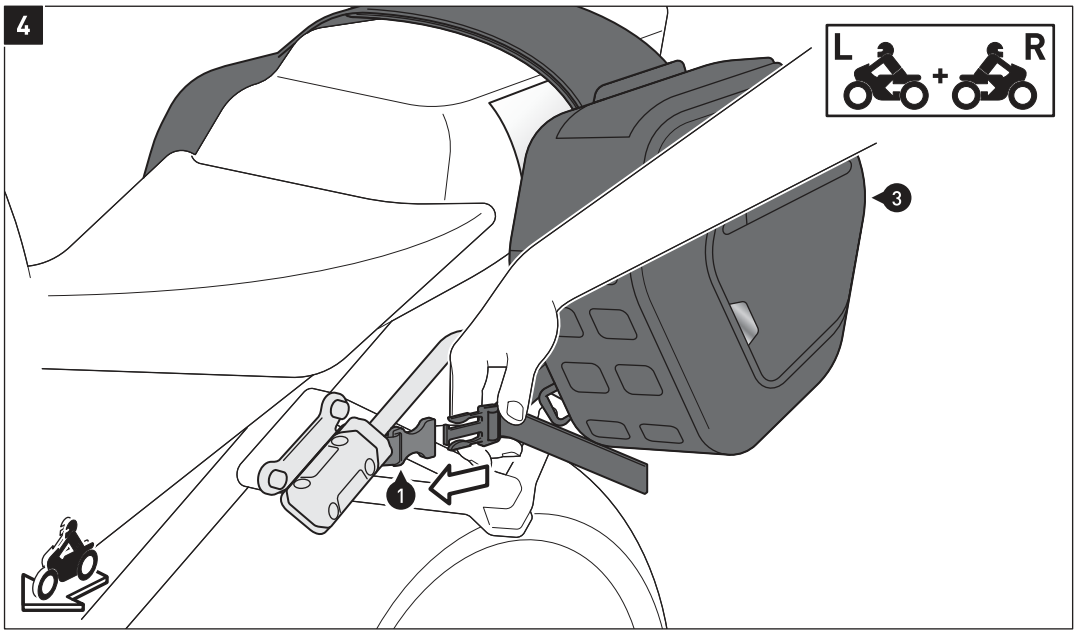

ACHTUNG: Beachten Sie unbedingt die den Satteltaschen Abstandsbügeln beiliegende Anbauanleitung!

Rasten Sie nun die Sicherungsgurte der Satteltaschen (3) **beidseitig** in die zuvor lose verschraubten Klickverschlüsse (1) ein. Ziehen Sie jetzt die Schrauben der Klickverschlüsse (1) an, wie in der Anbauanleitung der Satteltaschen Abstandsbügel beschrieben.

ATTENTION: Pay attention to the mounting instructions included to the saddlebags support arms!

Fix the saddlebags (3) with the safety straps to the loosely mounted buckles (1) on **both sides**. Then tighten the screws of the buckles (1) as described in the mounting instructions of the saddlebags support arms.

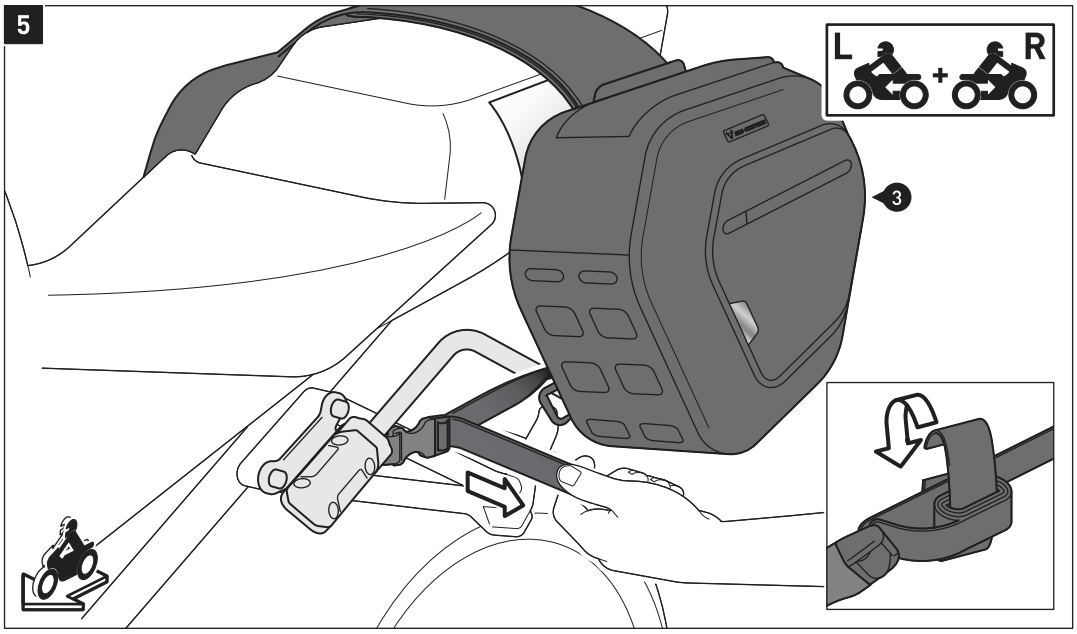

Ziehen Sie die Sicherungsgurte an, um die Satteltaschen (3) zu sichern.

ACHTUNG: Achten Sie VOR jeder Fahrt darauf, dass die Klettlaschen und Sicherungsgurte fest verspannt sind und die Abstandsbügel KEINE Last tragen! Durch nicht korrekt verspannte Satteltaschen (3) können Schäden am Produkt und Fahrzeug entstehen!

Rollen Sie abschließend die Überlängen der Sicherungsgurte auf und sichern Sie diese.

Tighten the safety straps to secure the saddlebags (3).

ATTENTION: Make sure BEFORE each ride that the velcro flaps and safety straps of the saddlebags (3) are firmly tightened and there is NO weight on the support arms! Wrong mounted saddlebags (3) can damaged the product and vehicle!

Finally roll up the excess safty strap length and secure it.

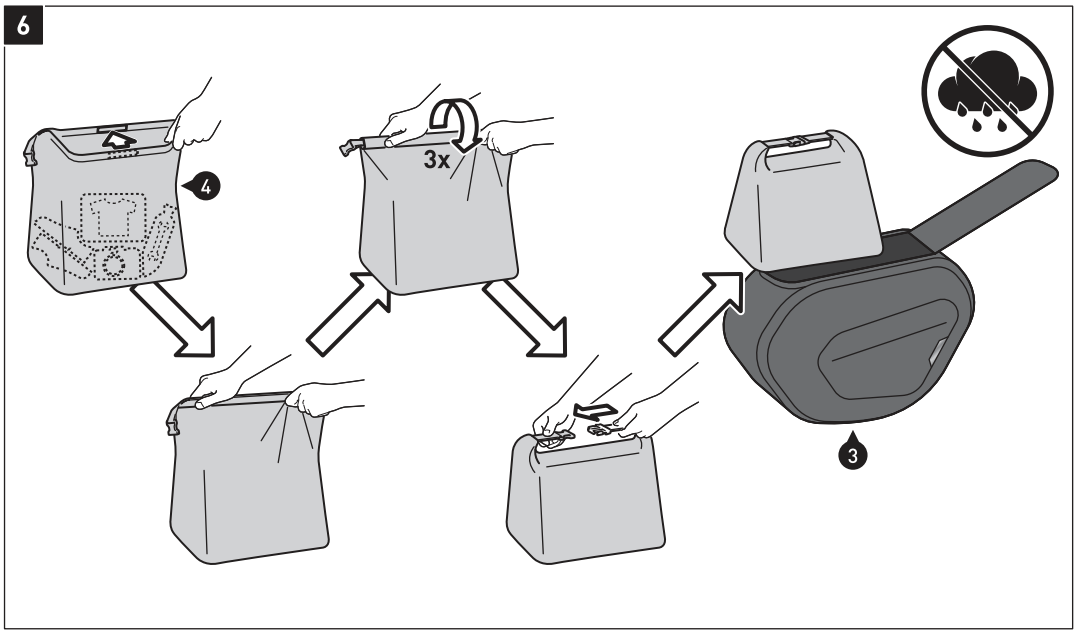

Verwenden Sie die wasserdichten Innentaschen (4), um Ihr Gepäck vor Feuchtigkeit zu schützen. Schützen Sie empfindliches Gepäck (z. B. elektronische Geräte) zusätzlich mit einer Plastiktüte vor Feuchtigkeit.

Use the waterproof inner bags (4) to protect your luggage from moisture. Additionally protect sensitive luggage (e.g., electronic equipment) from moisture with a plastic bag.

Copyright by
SW-MOTECH GmbH & Co. KG

Irrtümer und Änderungen vorbehalten. Technische und Design-Änderungen vorbehalten.
Errors and omissions excepted. Technical and design modifications are subject to change.

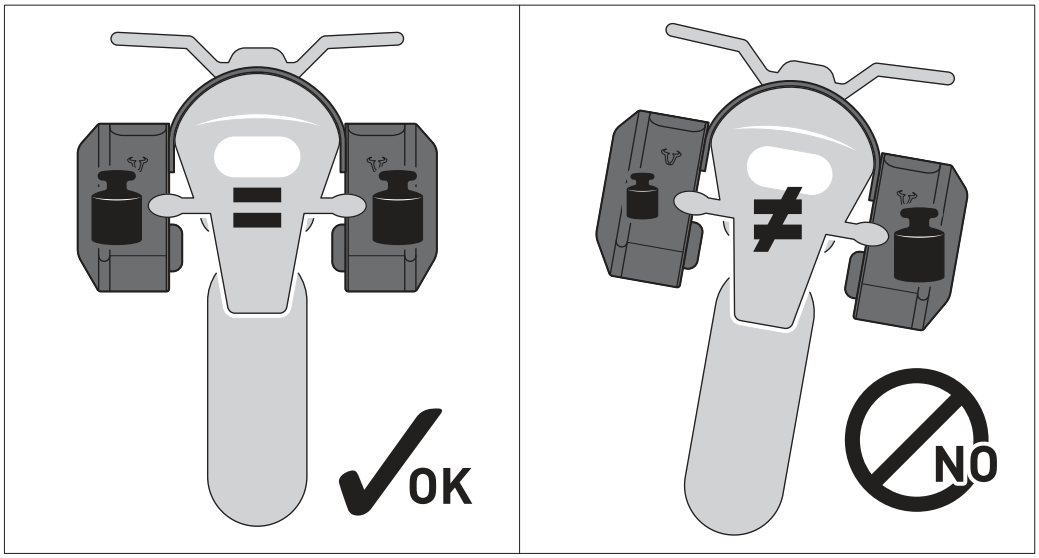

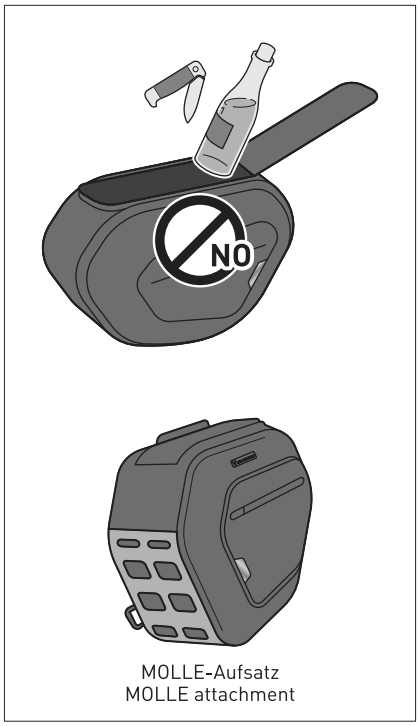

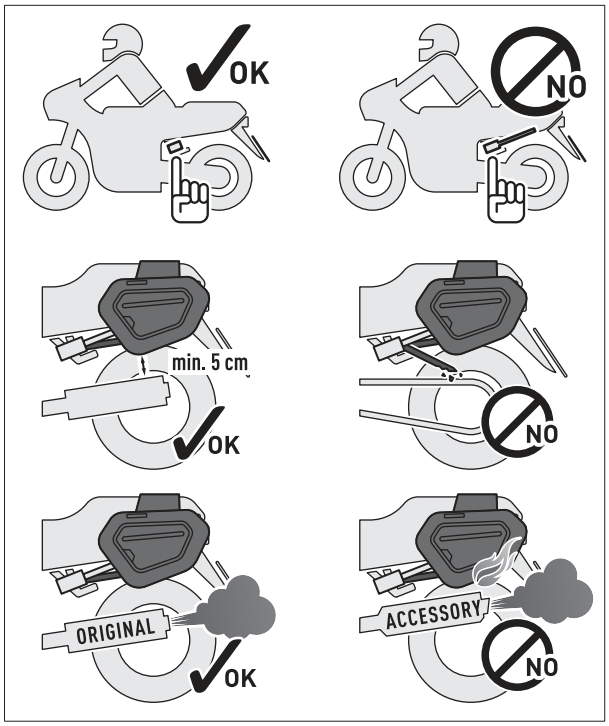

SICHERHEIT UND BELADUNG: Achten Sie auf die gleichmäßige Verteilung der Ladung zwischen den Satteltaschen! Stellen Sie sicher, dass die Ladung während der Fahrt gegen Verrutschen gesichert ist!
Keine scharfkantigen / zerbrechlichen Gegenstände verstauen!
Auf dem MOLLE-Aufsatz NUR zugewiesene SW-MOTECH-Produkte verschlaufen!

ACHTUNG: Entfernen Sie die Abstandsbügel bei Fahrten OHNE Satteltaschen vom Fahrzeug!

Stellen Sie sicher, dass keine Komponente des Produkts mit heißen und beweglichen Teilen des Fahrzeugs in Berührung kommen kann. Achten Sie darauf, dass alle Komponenten mindestens 5 cm Abstand zu heißen Teilen sowie dem heißen Abgasstrom des Auspuffs haben.

ACHTUNG: Die Kompatibilität mit Zubehör-Auspuffanlagen kann nicht gewährleistet werden!

SAFETY AND LOADING: Make sure weight is evenly distributed between the sagglebags. Make sure that the loanding is secured against shifting during the ride!
Do not store sharp or fragile objects!
ONLY loop assigned SW-MOTECH products to the MOLLE attachment!

ATTENTION: Remove the support arms when driving WITHOUT saddlebags from the vehicle!

All components of the product must not contact any hot or moving parts of the vehicle. All parts should also remain 5 cm away from hot parts of the vehicle and remain clear of the exhaust stream.

ATTENTION: Compatibility with accessory exhaust systems cannot be guaranteed!

ACHTUNG: Oberflächenmaterialien können bei längerer und intensiver Sonneneinstrahlung und Umwelteinflüssen (z. B. SMOG, saurer Regen, etc.) Farbveränderungen (Ausbleichen) unterliegen!
Benzin und ähnliche Stoffe müssen sofort abgewaschen werden!
SW-MOTECH übernimmt für Farbveränderungen keine Haftung!

ATTENTION: Surface materials can experience color changes or fading when exposed to direct sunlight for extended periods of time and by environmental factors (e.g., SMOG, acid rain, etc.)!
Gasoline and similar substances must be washed off immediately!
SW-MOTECH assumes no liability for color changes!

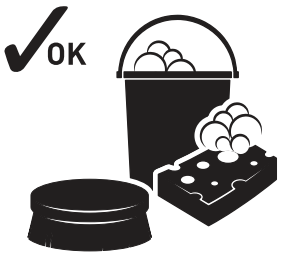

PFLEGE: Verwenden Sie zur Reinigung NUR eine weiche Textilbürste, ein Tuch oder Schwamm und warme Seifenlauge! Spülen Sie anschließend mit klarem Wasser nach.

Verwenden Sie KEINE scharfen Reinigungsmittel, raue Putzutensilien oder einen Hochdruckreiniger! Reinigen Sie das Produkt unbedingt nach Winterfahrten, um Schäden durch das Salz zu vermeiden.

CARE: For cleaning use ONLY a soft textile brush, cloth or sponge and warm soapy water! Rinse with clean water.

Do NOT use strong cleaning agents, rough cleaning tools or high pressure washer!
Clean the product after riding in salty conditions, to avoid damage from salt.

Copyright by
SW-MOTECH GmbH & Co. KG

Irrtümer und Änderungen vorbehalten. Technische und Design-Änderungen vorbehalten.
Errors and omissions expected. Technical and design-modifications are subjects to change.

Item number: **BC.HTA.00.740.12200/B**	Revision: **00** · Date: **09 - 2023**

Abrasion/edge protection

~ 0.25 h.	EASY DIFFICULT

ENGLISH ·Thank you for choosing this premium product from SW-MOTECH. Visit our online shop for more information (e.g. model assignments). Required documents (e.g. national type approval) are available there for you to download.

Please read and understand all the instructions, safety information and warnings in these mounting instructions before mounting and using the product in order to avoid injury and damage. Keep these mounting instructions for reference.

This product was developed for vehicles in factory condition. Compatibility with original accessories or accessories from other manufacturers cannot be guaranteed.

These mounting instructions have been prepared to the best of our current knowledge. No legal claims relating to accuracy can be made. Errors and omissions excepted. We reserve the right to make technical and design changes. The copyright is held by SW-MOTECH.

SAFETY WARNING SYMBOL

⚠ **This warning symbol is used in these mounting instructions to warn of deadly dangers, injuries or other hazards. The words DANGER, WARNING or CAUTION are used as part of this warning symbol to convey important safety messages and information relating to the installation and use of this product. These words, together with the safety warning symbol, mean:**

⚠ **DANGER:** Indicates a hazardous situation which, if not avoided, will result in death or serious injury!

⚠ **WARNING:** Indicates a hazardous situation which, if not avoided, may result in death or serious injury!

⚠ **CAUTION:** Indicates a hazardous situation which, if not avoided, may result in minor or moderate injury!

⚠ ***NOTE:*** Important information, but not relating to a risk of death or injury (property damage only)!

GENERAL INFORMATION

⚠ **WARNING: Assembly and/or maintenance of this product requires advanced technical skill, appropriate tools, and a good understanding of tool usage and torque specifications. For your own safety, SW-MOTECH recommends having the assembly and/or maintenance carried out by a qualified and certified motorcycle workshop.**

⚠ **WARNING: If you do choose to assemble this product yourself, carefully and fully read the mounting instructions before assembly and use, and follow all instructions to avoid serious injury or death. Also observe all relevant information in the vehicle manual when mounting or using the product. IF YOU DO NOT UNDERSTAND ANY PART OF THESE MOUNTING INSTRUCTIONS OR NEED AN EXPLANATION AS TO A SPECIFIC INSTRUCTION, DO NOT ATTEMPT TO INSTALL THIS PRODUCT WITHOUT CONSULTING SW-MOTECH FOR ASSISTANCE!**

PREPARATION: Read the mounting instructions carefully and make sure that all parts on the parts list are available.

⚠ **CAUTION: Ensure that your vehicle is standing securely. Switch off the engine and remove the ignition key. Allow the engine/exhaust to cool down if necessary. Disconnect the battery when working on the electrical system. Only use proper tools and always wear safety goggles and gloves during assembly and maintenance. Have a second person help you with assembly and maintenance.**

ASSEMBLY: All parts and connections removed from the vehicle must be reinstalled according to the vehicle manufacturer's specifications or replaced with parts and hardware supplied by SW-MOTECH.

⚠ **WARNING: Secure all threads with a medium-strength liquid threadlocker, unless otherwise specified.**

⚠ **DANGER: Tightening torques not defined by SW-MOTECH must be obtained from the vehicle manufacturer or a certified motorbike workshop.**

FUNCTIONAL CHECK: After mounting the product, ensure that no moving parts are obstructed and that the function of the vehicle is not impeded. Cables and hoses must not rub against each other and/or be hindered in any way.

⚠ **WARNING: Carry out a comprehensive functionality check before you start to drive. Check the tightening torque of all connections and the tight fit of the product after the first 50 km and then at regular intervals. Mounted accessories can change the handling and stability of the vehicle.**

SW-MOTECH GmbH & Co. KG
Ernteweg 7-10
35282 Rauschenberg
Germany

info@sw-motech.com
www.sw-motech.com

The content translation is automated.
© SW-MOTECH GmbH & Co. KG

Errors and omissions excepted
Subject to technical and design changes.

Take note of the symbols and what they mean in the ASSEMBLY section. If the term OEM appears in the ASSEMBLY section, the vehicle manufacturer's specifications must be observed and applied.

If you have any questions, please don't hesitate to contact our Customer Service team or our distributors. You can find our telephone number and a list of our distributors in our online shop:
www.sw-motech.com

© SW-MOTECH GmbH & Co. KG

Errors and omissions excepted
Subject to technical and design changes.

1

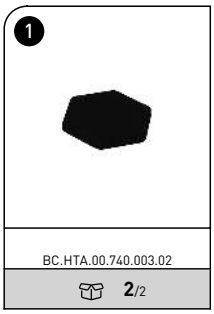

© SW-MOTECH GmbH & Co. KG

Errors and omissions excepted
Subject to technical and design changes.

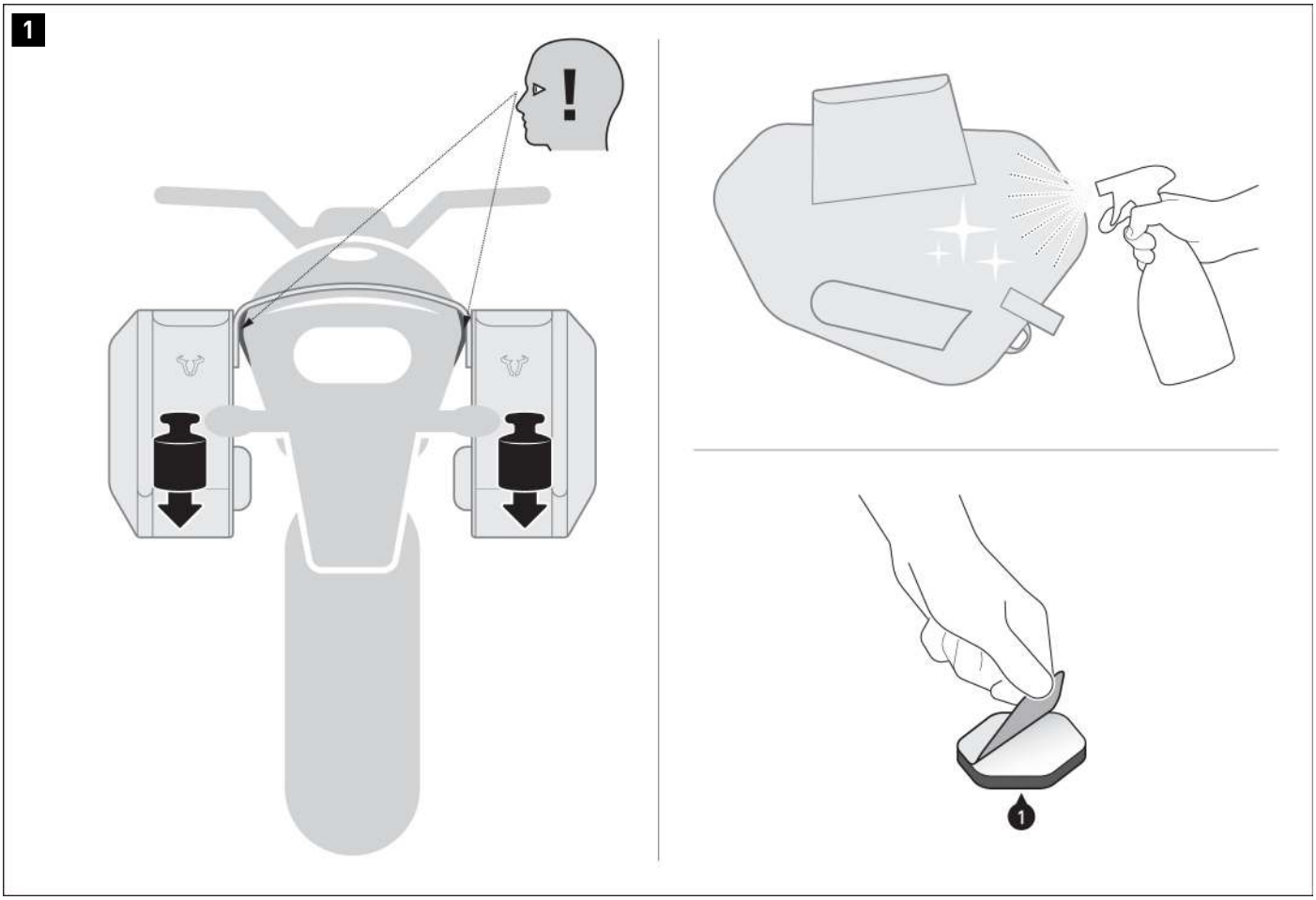

⚠ WARNING: Always wear eye and hand protection!
⚠ WARNING: Always use the proper tools!

⚠ CAUTION: The abrasion/edge protector (1) does NOT replace the adhesive protective foil included with the BLAZE saddlebag set! Use the adhesive protective foil as described in the mounting instructions for the BLAZE saddlebag set!

Determine the contact points for the BLAZE saddlebags on both sides of the vehicle rear; make sure that the BLAZE saddlebags are attached and loaded as specified in the mounting instructions for the BLAZE saddlebag set.

Thoroughly clean any grease and dirt residues from the determined adhesive positions.

Remove the foils from the adhesive surfaces of the abrasion/edge protectors (1).

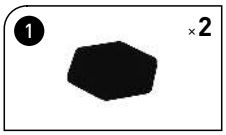

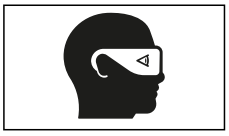

© SW-MOTECH GmbH & Co. KG

Errors and omissions excepted
Subject to technical and design changes.

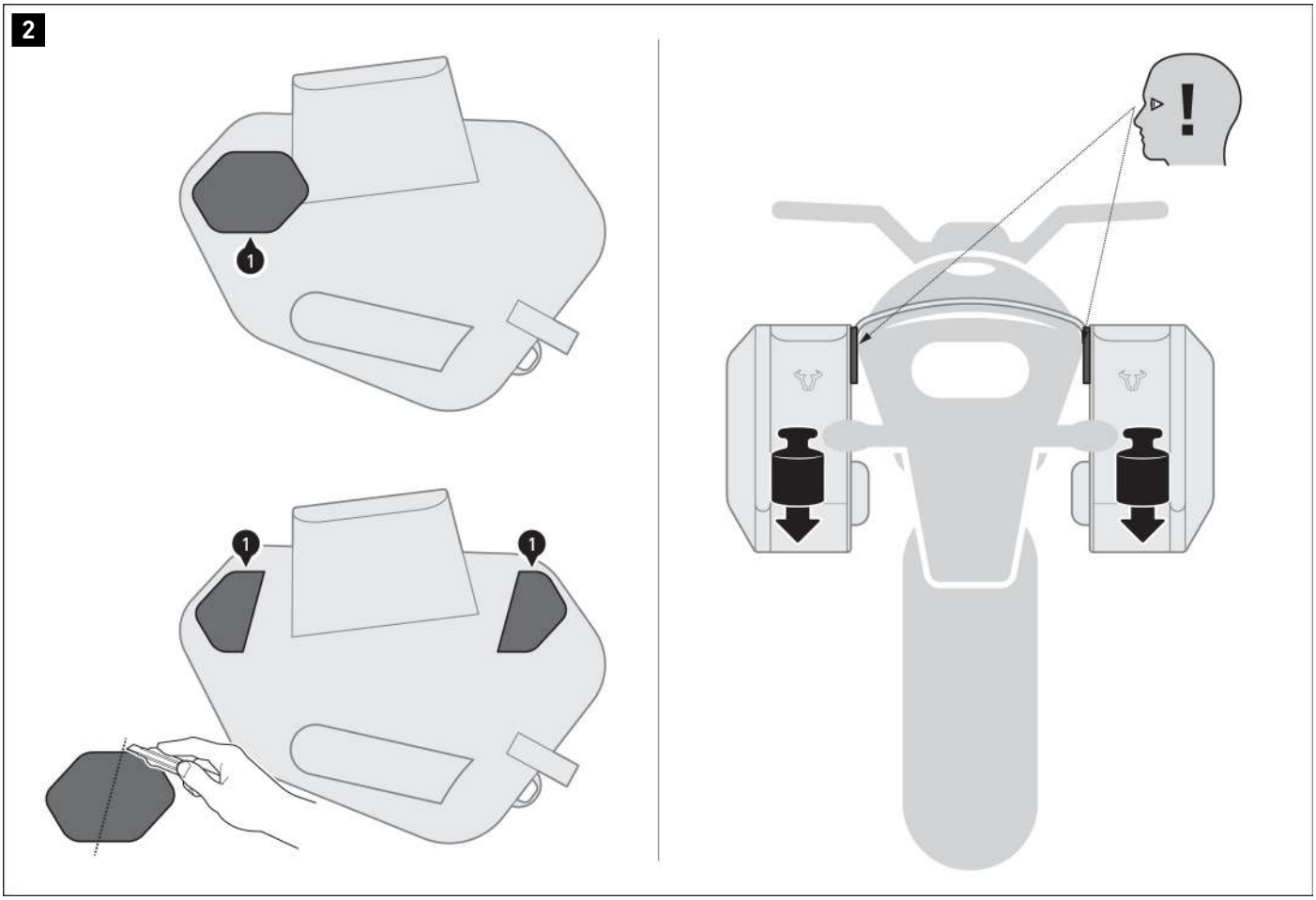

Now glue the abrasion/edge protectors (1) to the previously determined locations for the BLAZE saddlebags (the positions shown in the illustrations serve as examples).
⚠ ***NOTE:*** *If the BLAZE saddlebags have several contact points with the motorcycle, the edge protectors must be cut through and glued separately.*

Check the correct positioning of the abrasion/edge protectors (1) again once the BLAZE saddlebags have been loaded.

The content translation is automated.
© SW-MOTECH GmbH & Co. KG

Errors and omissions excepted
Subject to technical and design changes.

PRODUCT-SPECIFIC NOTES

⚠ ***NOTE***: *Observe the country-specific regulations for the registration/operation of your vehicle or applicable TÜV regulations. After assembly, have parts that are subject to registration entered in the vehicle documents by your test centre.*

© SW-MOTECH GmbH & Co. KG

Errors and omissions excepted
Subject to technical and design changes.