ANBAUANLEITUNG

mounting instructions • instructions de montage • instrucciones de montaje • istruzioni di montaggio

GPT.08.084.30000

beinhaltet • contains • contient • contiene • contiene

GPT.08.084.19000/B

GPT.00.152.35500/B

BC.HTA.00.305.30000

SW-MOTECH®

Item number: **GPT.08.084.19000/B**	Revision: **00** · Date: **05 - 2026**

ADVENTURE-RACK

~ 0.75 h.	EASY DIFFICULT

ENGLISH ·Thank you for choosing this premium product from SW-MOTECH. Visit our online shop for more information (e.g. model assignments). Required documents (e.g. national type approval) are available there for you to download.
Please read and understand all the instructions, safety information and warnings in these mounting instructions before mounting and using the product in order to avoid injury and damage. Keep these mounting instructions for reference.
This product was developed for vehicles in factory condition. Compatibility with original accessories or accessories from other manufacturers cannot be guaranteed.
These mounting instructions have been prepared to the best of our current knowledge. No legal claims relating to accuracy can be made. Errors and omissions excepted. We reserve the right to make technical and design changes. The copyright is held by SW-MOTECH.

SAFETY WARNING SYMBOL

⚠ **This warning symbol is used in these mounting instructions to warn of deadly dangers, injuries or other hazards. The words DANGER, WARNING or CAUTION are used as part of this warning symbol to convey important safety messages and information relating to the installation and use of this product. These words, together with the safety warning symbol, mean:**

⚠ **DANGER:** Indicates a hazardous situation which, if not avoided, will result in death or serious injury!

⚠ **WARNING:** Indicates a hazardous situation which, if not avoided, may result in death or serious injury!

⚠ **CAUTION:** Indicates a hazardous situation which, if not avoided, may result in minor or moderate injury!

⚠ ***NOTE:*** Important information, but not relating to a risk of death or injury (property damage only)!

GENERAL INFORMATION

⚠ **WARNING: Assembly and/or maintenance of this product requires advanced technical skill, appropriate tools, and a good understanding of tool usage and torque specifications. For your own safety, SW-MOTECH recommends having the assembly and/or maintenance carried out by a qualified and certified motorcycle workshop.**

⚠ **WARNING: If you do choose to assemble this product yourself, carefully and fully read the mounting instructions before assembly and use, and follow all instructions to avoid serious injury or death. Also observe all relevant information in the vehicle manual when mounting or using the product. IF YOU DO NOT UNDERSTAND ANY PART OF THESE MOUNTING INSTRUCTIONS OR NEED AN EXPLANATION AS TO A SPECIFIC INSTRUCTION, DO NOT ATTEMPT TO INSTALL THIS PRODUCT WITHOUT CONSULTING SW-MOTECH FOR ASSISTANCE!**

PREPARATION: Read the mounting instructions carefully and make sure that all parts on the parts list are available.

⚠ **CAUTION: Ensure that your vehicle is standing securely. Switch off the engine and remove the ignition key. Allow the engine/exhaust to cool down if necessary. Disconnect the battery when working on the electrical system. Only use proper tools and always wear safety goggles and gloves during assembly and maintenance. Have a second person help you with assembly and maintenance.**

ASSEMBLY: All parts and connections removed from the vehicle must be reinstalled according to the vehicle manufacturer's specifications or replaced with parts and hardware supplied by SW-MOTECH.

⚠ **WARNING: Secure all threads with a medium-strength liquid threadlocker, unless otherwise specified.**

⚠ **DANGER: Tightening torques not defined by SW-MOTECH must be obtained from the vehicle manufacturer or a certified motorbike workshop.**

FUNCTIONAL CHECK: After mounting the product, ensure that no moving parts are obstructed and that the function of the vehicle is not impeded. Cables and hoses must not rub against each other and/or be hindered in any way.

⚠ **WARNING: Carry out a comprehensive functionality check before you start to drive. Check the tightening torque of all connections and the tight fit of the product after the first 50 km and then at regular intervals. Mounted accessories can change the handling and stability of the vehicle.**

SW-MOTECH GmbH & Co. KG
Ernteweg 7-10
35282 Rauschenberg
Germany

info@sw-motech.com
www.sw-motech.com

The content translation is automated.
© SW-MOTECH GmbH & Co. KG

Errors and omissions excepted
Subject to technical and design changes.

Take note of the symbols and what they mean in the ASSEMBLY section. If the term OEM appears in the ASSEMBLY section, the vehicle manufacturer's specifications must be observed and applied.

If you have any questions, please don't hesitate to contact our Customer Service team or our distributors. You can find our telephone number and a list of our distributors in our online shop:
www.sw-motech.com

Use thread locker: Indicates that a thread must be coated with liquid thread locker. H (HIGH): high strength; M (MEDIUM): medium strength; L (LOW): low strength.

Tighten/note the tightening torque information: Indicates the tightening torque of a part specified by SW-MOTECH or the vehicle manufacturer (OEM).

Do not use thread lock: Indicates that no liquid thread lock should be used at this point.

© SW-MOTECH GmbH & Co. KG

Errors and omissions excepted
Subject to technical and design changes.

2

1	2	3	4	5	6
GPT.08.084.902.01.11	GPT.08.084.901.01.11	KES.RD.213.0850.02.GLZ	M8 x 50; DIN 6912 SC.ST.08.050.02.6912.088	M8 x 65; DIN 6912 SC.ST.08.065.02.6912.088	ø 8,4; DIN 125 US.ST.084.02.125
1/1	**1**/1	**4**/4	**2**/2	**2**/2	**4**/4

7	8
Ø 22 / ø 8,4 / h 36 DB.ST.0220.0084.0360.48	Ø 22 / ø 8,4 / h 20 DB.ST.0220.0084.0200.48
2/2	**2**/2

3

9	10	11	12
GPT.00.152.002.11	M6 x 18; ISO 7380 SC.ST.06.018.02.7380.109	ø 6.4; DIN 9021 US.ST.064.02.9021	M6; DIN 6927 MU.ST.06.02.6927.08
1/1	**4**/4	**4**/4	**4**/4

The content translation is automated.
© SW-MOTECH GmbH & Co. KG

Errors and omissions excepted
Subject to technical and design changes.

1

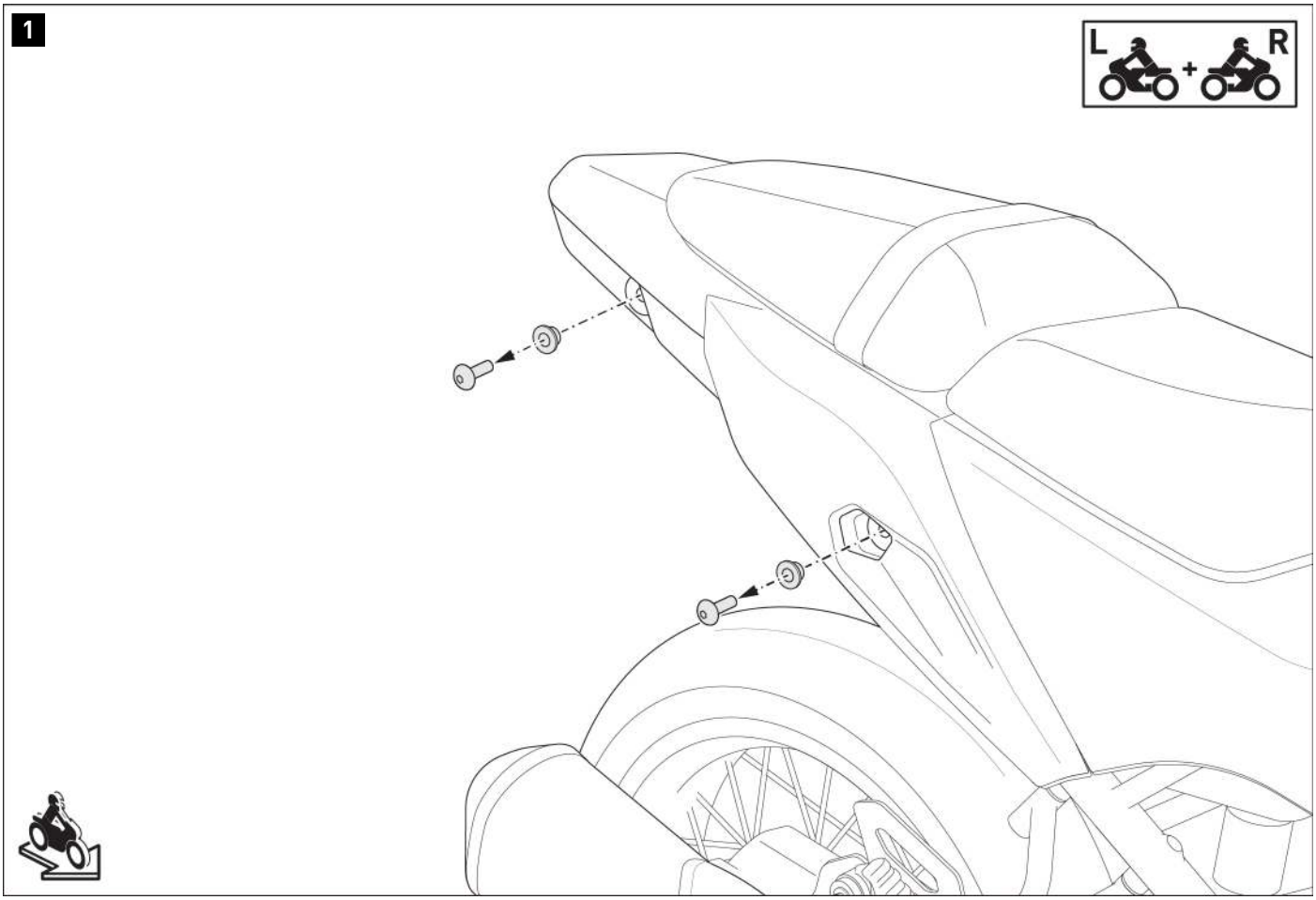

⚠ WARNING: Always wear eye and hand protection!
⚠ WARNING: Always use suitable tools!

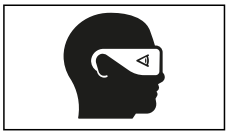

Remove the indicated screws on **both sides** of the vehicle.

© SW-MOTECH GmbH & Co. KG

Errors and omissions excepted
Subject to technical and design changes.

2

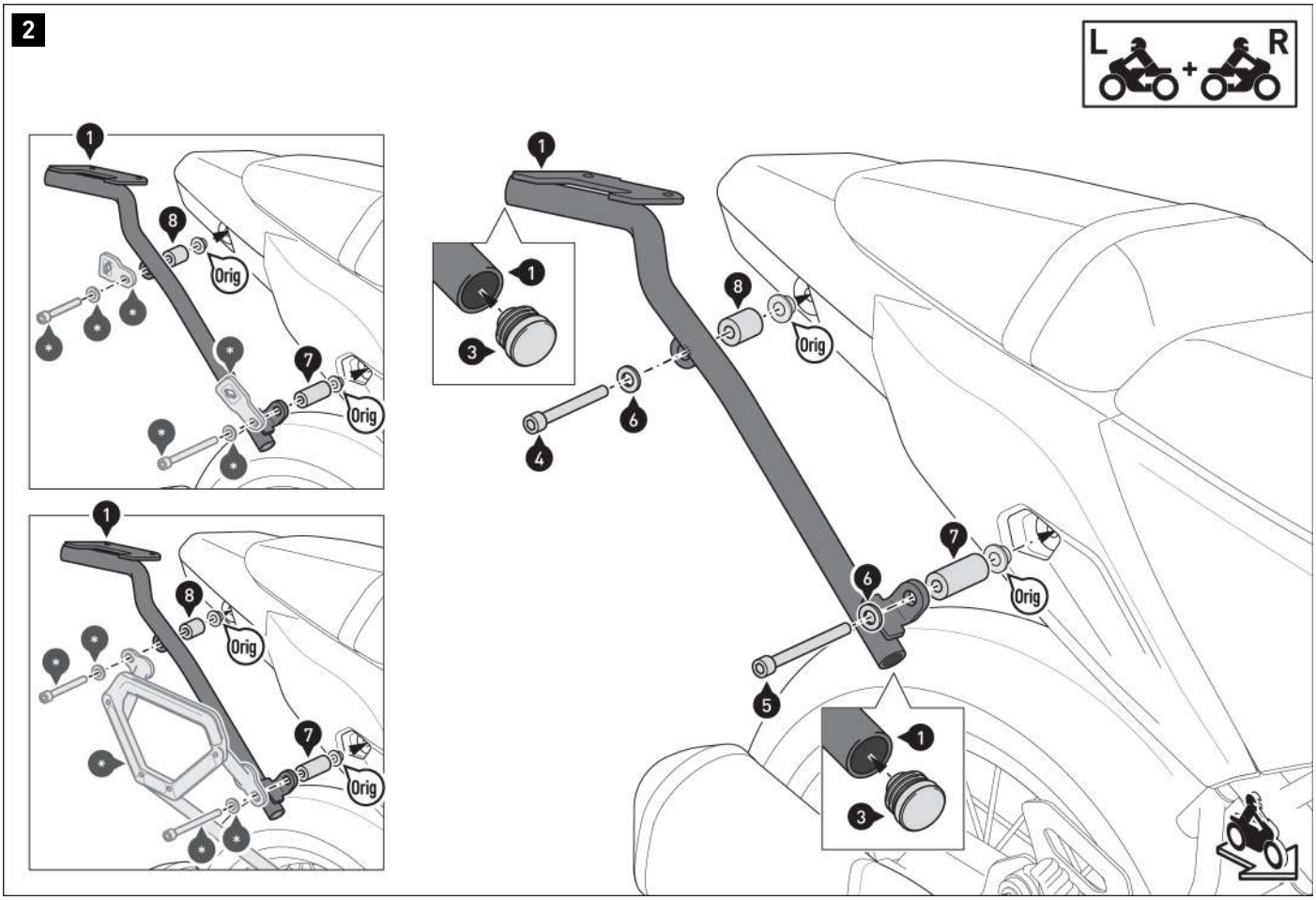

⚠ ***NOTE:*** *The detailed drawings illustrate how to mount the rack with the* ***SW-MOTECH PRO side carrier*** *(above) and* ***VMC side carrier*** *(below). Use the mounting parts provided with the respective side carrier (•) together with the indicated mounting parts from the rack.*

Insert the plastic plugs (3) into the ends of the mounting struts (1/2).

Screw the struts (1/2) to **both sides** of the vehicle.
⚠ **WARNING: Use liquid threadlocker!**
Do not tighten screws (4) and (5) yet.

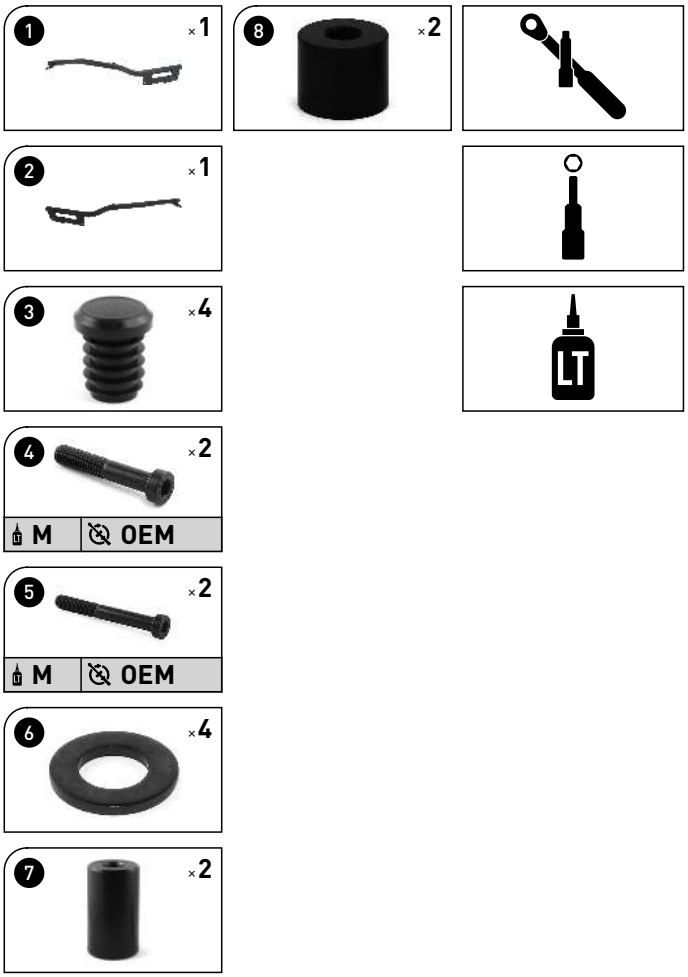

The content translation is automated.
© SW-MOTECH GmbH & Co. KG

Errors and omissions excepted
Subject to technical and design changes.

3

⚠ ***NOTE:*** *Depending on the space available, screw the rack to* ***mounting position (A)*** *or* ***(B)****, as indicated in the detailed drawing.*

Mount the rack (9) onto the mounting struts (1/2).

Once all components have been loosely positioned, tighten the screws (4) and (5) according to the vehicle manufacturer's specifications.

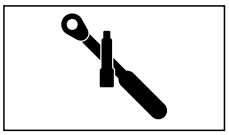

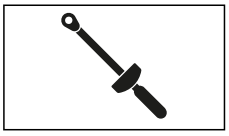

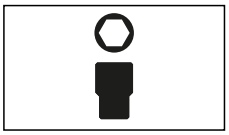

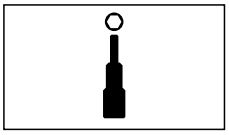

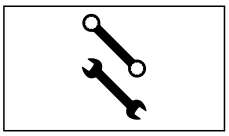

The content translation is automated.
© SW-MOTECH GmbH & Co. KG

Errors and omissions excepted
Subject to technical and design changes.

PRODUCT-SPECIFIC NOTES

⚠ WARNING: The specified maximum load includes the weight of the suitcase/luggage and adapter plate/adapter kit. The maximum load of the vehicle specified by the bike manufacturer applies.

≤ 10 kg (≤ 22 lbs)	≤ 130 km/h (≤ 80 mph)

⚠ ***NOTICE:****Observe all country-specific regulations for the registration and operation of your vehicle as well as any applicable TÜV regulations. Have any parts requiring registration entered into your vehicle documents by your vehicle inspection authority after they have been installed .*

© SW-MOTECH GmbH & Co. KG

Errors and omissions excepted
Subject to technical and design changes.

Art.-Nr. / Item No.: **GPT.00.152.35500/B** Revision: **00** · Datum / Date: **02 - 2018**

Erweiterung für ADVENTURE-RACK Gepäckträger

Extension for ADVENTURE-RACK

DEUTSCH - Vielen Dank, dass Sie sich für dieses Premium-Produkt von SW-MOTECH entschieden haben. Bitte besuchen Sie unseren Webshop für weitere Informationen wie Modellzuweisungen und PDF-Anbauanleitung. Erforderliche Dokumente (z. B. ABE) stehen als Download zur Verfügung.

Die Montage und/oder Wartung dieses Produkts erfordert ein gutes technisches Verständnis! Zu Ihrer eigenen Sicherheit empfiehlt SW-MOTECH, die Montage und/oder Wartung durch eine Fachwerkstatt durchführen zu lassen! SW-MOTECH übernimmt keine Haftung für Schäden, die durch eine unsachgemäße Montage und/oder Wartung verursacht wurden!
Beachten Sie alle in der Anbauanleitung angegebenen Hinweise und die für die Montage relevanten Informationen im Fahrzeughandbuch. Nichtbeachtung kann zu Schäden am Fahrzeug bzw. zur Gefährdung des Fahrers führen! Diese Anbauanleitung ist nach unserem derzeitigen Kenntnisstand verfasst worden. Rechtliche Ansprüche auf Richtigkeit bestehen nicht.

Dieses Produkt wurde für Fahrzeuge im Werkszustand entwickelt. Die Kompatibilität mit Original-Zubehörteilen bzw. den Zubehörteilen anderer Hersteller kann nicht gewährleistet werden. Stellen Sie des Weiteren VOR Montage dieses Produkts sicher, dass sich alle beweglichen Teile (z. B. die Kette) im ursprünglichen Wartungszustand befinden. Montiertes Zubehör kann das Fahrverhalten und/oder die Stabilität Ihres Fahrzeugs verändern.

ENGLISH - Thank you for choosing this premium product from SW-MOTECH. Please visit our webshop for additional information, such as application charts and PDF mounting instructions. Any other documents that may be required (e.g. ABE certifications), are also available for download at our webshop.

Installation and/or maintenance of this product require good technical understanding! For your own safety SW-MOTECH recommends having installation and/or servicing carried out by a specialist workshop! SW-MOTECH assumes no liability for damage caused by improper installation and/or maintenance work!
Carefully follow all the directions given in the mounting instructions and pay attention to all relevant information in the vehicle manual during assembly. Nonconformance can lead to vehicle damage or even endanger the driver! These mounting instructions are written based on our current state of knowledge. Legal requirements for accuracy do not exist.

This product was developed for vehicles in their factory setting. Compatibility with original accessory parts or other manufacturers' accessory parts is not guaranteed. Furthermore, BEFORE installing this product, make sure that all moving parts (e.g. the chain) are in the original state of maintenance. Installed accessories can change the driving behaviour and/or stability of your vehicle.

ALLGEMEINE HINWEISE

Beachten Sie die landesspezifischen Vorschriften für Zulassung/Betrieb Ihres Fahrzeugs bzw. anwendbare TÜV-Vorschriften. Lassen Sie eintragungspflichtige Teile nach Montage durch Ihre Prüfstelle in die Fahrzeugpapiere eintragen.

VORBEREITUNG: Lesen Sie die Anbauanleitung aufmerksam und stellen Sie sicher, dass alle Teile der Stückliste vorhanden sind. Achten Sie darauf, dass Ihr Fahrzeug sicher steht und nicht umfallen kann. Schalten Sie den Motor ab und ziehen Sie den Zündschlüssel. Lassen Sie ggf. den Motor/Auspuff abkühlen. Klemmen Sie bei Arbeiten an der Elektrik die Fahrzeugbatterie ab. Verwenden Sie geeignetes Werkzeug. Lassen Sie sich von einer zweiten Person helfen.

MONTAGE: Alle vom Motorrad gelösten Teile und Verbindungen sind gemäß den Fahrzeugherstellerangaben wieder zu montieren oder durch die von SW-MOTECH gelieferten Teile zu ersetzen. Sichern Sie, falls nicht anderweitig definiert, alle Gewinde mit mittelfester, flüssiger Schraubensicherung.
Alle nicht durch SW-MOTECH definierten Anzugsmoment-Vorgaben müssen beim Fahrzeughersteller oder einer Fachwerkstatt erfragt werden!

FUNKTIONSKONTROLLE: Stellen Sie nach der Montage sicher, dass alle zuvor gelösten Teile und Verbindungen wieder ordnungsgemäß montiert wurden. Achten Sie außerdem auf die uneingeschränkte Freigängigkeit und einwandfreie Funktion sämtlicher Fahrzeugteile. Kabel, Züge und Schläuche dürfen nicht scheuern und/oder geklemmt werden. Führen Sie vor Fahrtbeginn eine umfassende Funktionskontrolle durch. Überprüfen Sie nach den ersten 50 km und anschließend in regelmäßigen Abständen das Anzugsmoment aller Schraubverbindungen und den ordnungsgemäßen Sitz des Produkts.

GENERAL INFORMATION

Observe the country-specific regulations concerning vehicle registration/operation as well as TÜV regulations if applicable. If required, register installed parts in the vehicle documents through an appropriate inspection authority.

PREPARATION: Read the mounting instructions carefully and make sure that all items of the parts list are included. Make sure that your vehicle is parked safely and cannot fall over. Turn off the engine and remove the ignition key. Let the motor/exhaust cool off if necessary. Disconnect the vehicle battery when working on the electrical system. Use appropriate tools. Have another person to help you.

MOUNTING: All parts and connections removed from the vehicle must be reinstalled in accordance with the vehicle manufacturers' specifications or replaced by parts delivered by SW-MOTECH. Secure all threads, unless otherwise specified, with medium-strength liquid thread locker.
Torque specifications undefined by SW-MOTECH must be obtained from the vehicle manufacturer or by a specialist workshop!

FUNCTION CHECK: After installation make sure that all parts and connections previously removed are properly replaced. Also make sure that no moving parts are obstructed and no function of the vehicle is hindered in any way. Cables and hoses must not rub and/or be pinched. Before starting to ride, perform a comprehensive check of all functions. After the first 50 km and then at regular intervals, check the tightening torque of all screw connections and the proper fit of the product.

Konfektionierung durch / Packed by:	Datum der Konfektionierung / Date of packaging:

SW-MOTECH®

SW-MOTECH GmbH & Co. KG
Ernteweg 8/10
35282 Rauschenberg
Germany

Tel. / phone + 49 (0)6425 / 8168 - 050
Fax / fax + 49 (0)6425 / 8168 - 10
info@sw-motech.com
www.sw-motech.com

Copyright by
SW-MOTECH GmbH & Co. KG

Irrtümer und Änderungen vorbehalten. Technische und Design-Änderungen vorbehalten.
Errors and omissions excepted. Technical and design modifications are subject to change.

STÜCKLISTE / PARTS LIST

Schritt Step	Nr. No.	Art.-Nr. / Bezeichnung * Item No. / Description *	Artikel	Part	Anzahl ** Quantity **	N·m ***
	(1)	GPT.00.152.048	Erweiterung	Luggage Rack Extension	**1** / 1	
	(2)	M6 x 14; ISO 7380	Linsenkopfschraube; schwarz	Lenshead Screw; black	**4** / 4	9
	(3)	M6; DIN 985	Mutter, selbstsichernd	Lock Nut	**4** / 4	

8.8	Regelgewinde / Coarse Thread **Ø**	**M4**	**M5**	**M6**	**M8**	**M10**	**M12**
	Stahl FK 8.8 / Steel CL 8.8 **N·m**	2,8	5,5	9,6	23	46	79

10.9	Regelgewinde / Coarse Thread **Ø**	**M4**	**M5**	**M6**	**M8**	**M10**	**M12**
	Stahl FK 10.9 / Steel CL 10.9 **N·m**	4,1	8,1	14	34	67	115

* Alle Maßangaben in Millimeter. · ** Der zweite Wert gibt die Gesamtanzahl des jew. Artikels in der Lieferung an.
*** **Keine Anzugsmomentvorgabe: Verwenden Sie das vom Fzg.-Hersteller definierte Anzugsmoment!** Das Standard-Anzugsmoment der Tabelle kann verwendet werden, wenn es den Fzg.-Hersteller-Vorgaben entspricht.

* All measurements in millimeters. · ** The second number indicates the total quantity of the part in the delivery.
*** **No torque specifications: Use the torque defined by vehicle manufacturer!** The standard torque in this table can be used as long as it is within the vehicle manufacturer's specifications.

Copyright by
SW-MOTECH GmbH & Co. KG

Irrtümer und Änderungen vorbehalten. Technische und Design-Änderungen vorbehalten.
Errors and omissions excepted. Technical and design modifications are subject to change.

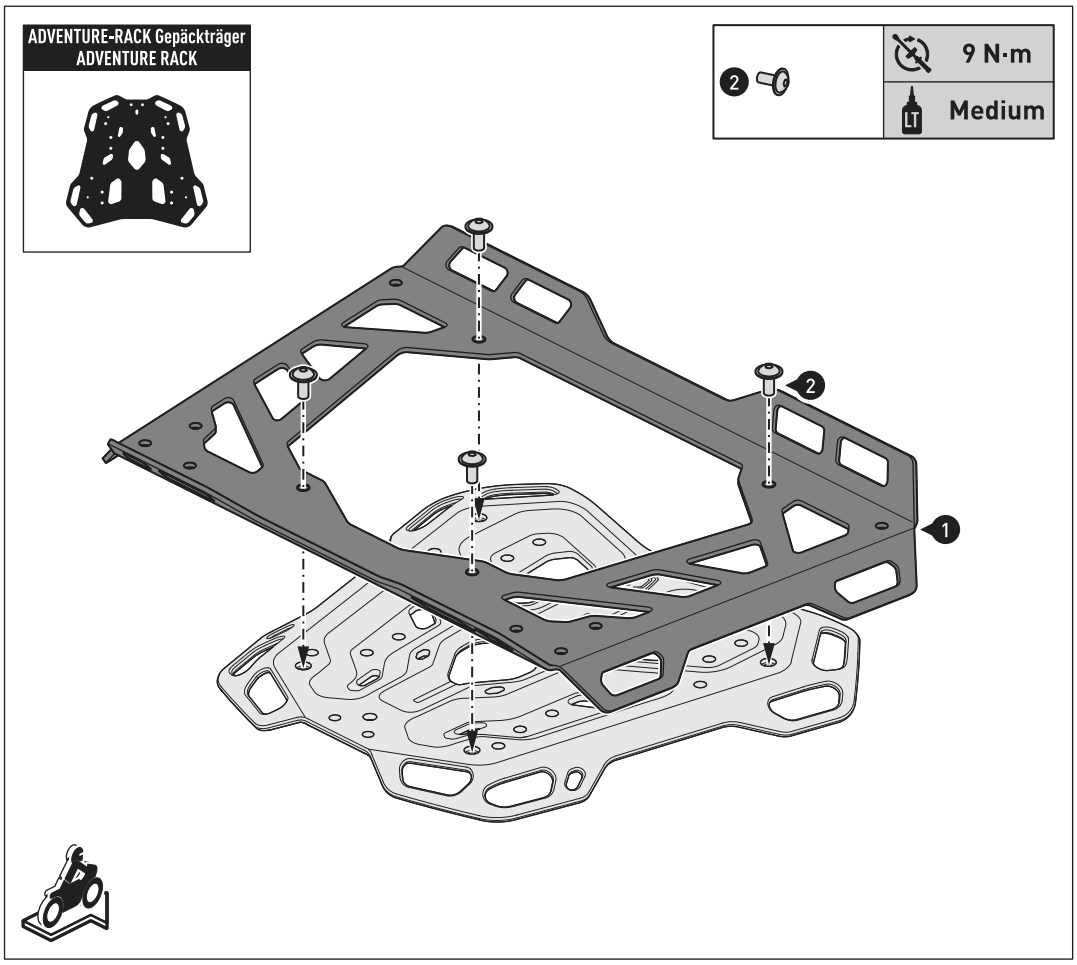

ADVENTURE-RACK Gepäckträger

Verschrauben Sie die gezeigten Teile an ihrem ADVENTURE-RACK Gepäckträger (separat erhältlich).
ACHTUNG: Verwenden Sie flüssige Schraubensicherung!
Ziehen Sie die Schrauben wie in der Stückliste vorgegeben an.

ADVENTURE RACK

Attach the shown parts to your ADVENTURE RACK (sold separately).
ATTENTION: Use liquid thread locker!
Tighten the screws as specified in the parts list.

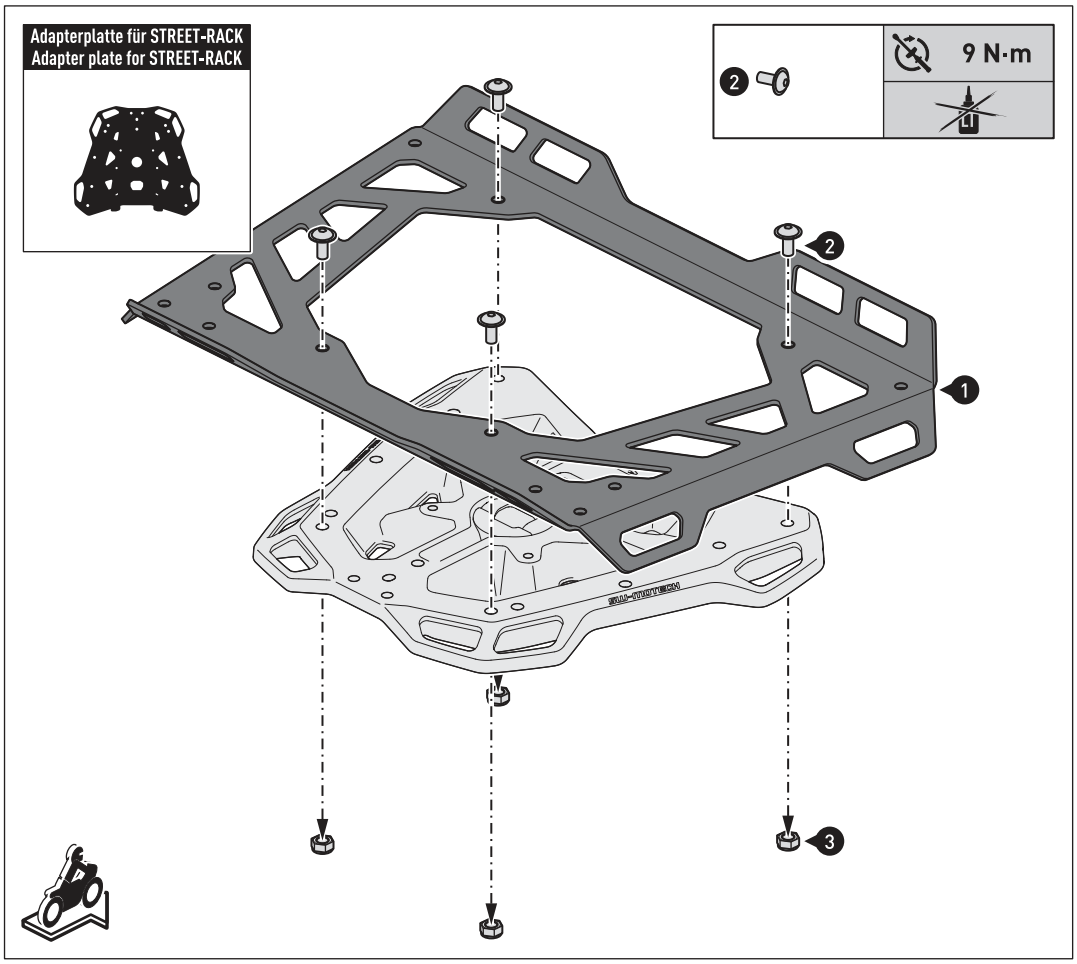

Adapterplatte für STREET-RACK Gepäckträger

Verschrauben Sie die gezeigten Teile an ihrer Adapterplatte für STREET-RACK Gepäckträger (separat erhältlich).
Ziehen Sie die Schrauben wie in der Stückliste vorgegeben an.

Adapter plate for STREET-RACK

Attach the shown parts to your adapter plate for STREET-RACK (sold separately).
Tighten the screws as specified in the parts list.

Copyright by
SW-MOTECH GmbH & Co. KG

Irrtümer und Änderungen vorbehalten. Technische und Design-Änderungen vorbehalten.
Errors and omissions excepted. Technical and design modifications are subject to change.

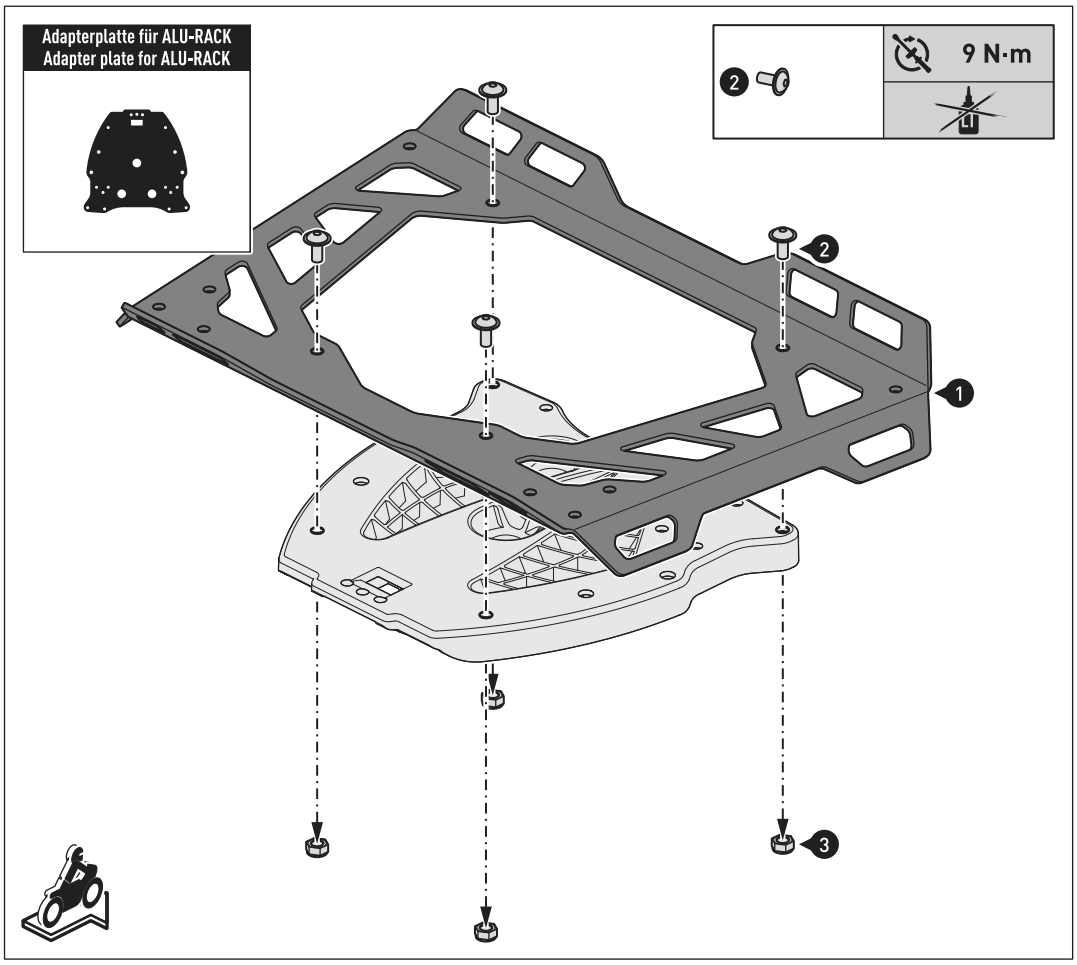

Adapterplatte für ALU-RACK Gepäckträger

Verschrauben Sie die gezeigten Teile an ihrer Adapterplatte für ALU-RACK Gepäckträger (separat erhältlich).
Ziehen Sie die Schrauben wie in der Stückliste vorgegeben an.

Adapter plate for ALU-RACK

Attach the shown parts to your adapter plate for ALU-RACK (sold separately).
Tighten the screws as specified in the parts list.

Copyright by
SW-MOTECH GmbH & Co. KG

Irrtümer und Änderungen vorbehalten. Technische und Design-Änderungen vorbehalten.
Errors and omissions excepted. Technical and design modifications are subject to change.

Item number: **BC.HTA.00.305.30000**	Revision: **01** · Date: **08 - 2025**

PRO Rackpack tail bag

~ 0.25 h.	EASY DIFFICULT

ENGLISH ·Thank you for choosing this premium product from SW-MOTECH. Visit our online shop for more information (e.g. model assignments). Required documents (e.g. national type approval) are available there for you to download.
Please read and understand all the instructions, safety information and warnings in these mounting instructions before mounting and using the product in order to avoid injury and damage. Keep these mounting instructions for reference.
This product was developed for vehicles in factory condition. Compatibility with original accessories or accessories from other manufacturers cannot be guaranteed.
These mounting instructions have been prepared to the best of our current knowledge. No legal claims relating to accuracy can be made. Errors and omissions excepted. We reserve the right to make technical and design changes. The copyright is held by SW-MOTECH.

SAFETY WARNING SYMBOL

⚠ **This warning symbol is used in these mounting instructions to warn of deadly dangers, injuries or other hazards. The words DANGER, WARNING or CAUTION are used as part of this warning symbol to convey important safety messages and information relating to the installation and use of this product. These words, together with the safety warning symbol, mean:**

⚠ **DANGER:** Indicates a hazardous situation which, if not avoided, will result in death or serious injury!

⚠ **WARNING:** Indicates a hazardous situation which, if not avoided, may result in death or serious injury!

⚠ **CAUTION:** Indicates a hazardous situation which, if not avoided, may result in minor or moderate injury!

⚠ ***NOTE:*** Important information, but not relating to a risk of death or injury (property damage only)!

GENERAL INFORMATION

⚠ **WARNING: Assembly and/or maintenance of this product requires advanced technical skill, appropriate tools, and a good understanding of tool usage and torque specifications. For your own safety, SW-MOTECH recommends having the assembly and/or maintenance carried out by a qualified and certified motorcycle workshop.**

⚠ **WARNING: If you do choose to assemble this product yourself, carefully and fully read the mounting instructions before assembly and use, and follow all instructions to avoid serious injury or death. Also observe all relevant information in the vehicle manual when mounting or using the product. IF YOU DO NOT UNDERSTAND ANY PART OF THESE MOUNTING INSTRUCTIONS OR NEED AN EXPLANATION AS TO A SPECIFIC INSTRUCTION, DO NOT ATTEMPT TO INSTALL THIS PRODUCT WITHOUT CONSULTING SW-MOTECH FOR ASSISTANCE!**

PREPARATION: Read the mounting instructions carefully and make sure that all parts on the parts list are available.

⚠ **CAUTION: Ensure that your vehicle is standing securely. Switch off the engine and remove the ignition key. Allow the engine/exhaust to cool down if necessary. Disconnect the battery when working on the electrical system. Only use proper tools and always wear safety goggles and gloves during assembly and maintenance. Have a second person help you with assembly and maintenance.**

ASSEMBLY: All parts and connections removed from the vehicle must be reinstalled according to the vehicle manufacturer's specifications or replaced with parts and hardware supplied by SW-MOTECH.

⚠ **WARNING: Secure all threads with a medium-strength liquid threadlocker, unless otherwise specified.**

⚠ **DANGER: Tightening torques not defined by SW-MOTECH must be obtained from the vehicle manufacturer or a certified motorbike workshop.**

FUNCTIONAL CHECK: After mounting the product, ensure that no moving parts are obstructed and that the function of the vehicle is not impeded. Cables and hoses must not rub against each other and/or be hindered in any way.

⚠ **WARNING: Carry out a comprehensive functionality check before you start to drive. Check the tightening torque of all connections and the tight fit of the product after the first 50 km and then at regular intervals. Mounted accessories can change the handling and stability of the vehicle.**

SW-MOTECH GmbH & Co. KG
Ernteweg 7-10
35282 Rauschenberg
Germany

info@sw-motech.com
www.sw-motech.com

The content translation is automated.
© SW-MOTECH GmbH & Co. KG

Errors and omissions excepted
Subject to technical and design changes.

Take note of the symbols and what they mean in the ASSEMBLY section. If the term OEM appears in the ASSEMBLY section, the vehicle manufacturer's specifications must be observed and applied.

If you have any questions, please don't hesitate to contact our Customer Service team or our distributors. You can find our telephone number and a list of our distributors in our online shop:
www.sw-motech.com

© SW-MOTECH GmbH & Co. KG

Errors and omissions excepted
Subject to technical and design changes.

1

1

LSF.350.250

1/1

2

BC.HTA.00.305.30000

1/1

2

3

BC.ZUB.00.128.30000

1/1

5

4

BC.ZUB.00.120.30000

1/1

5

BC.ZUB.00.121.30000

1/1

6

6

BC.ZUB.00.122.30000

1/1

7

BC.ZUB.00.041.30000

1/1

The content translation is automated.
© SW-MOTECH GmbH & Co. KG

Errors and omissions excepted
Subject to technical and design changes.

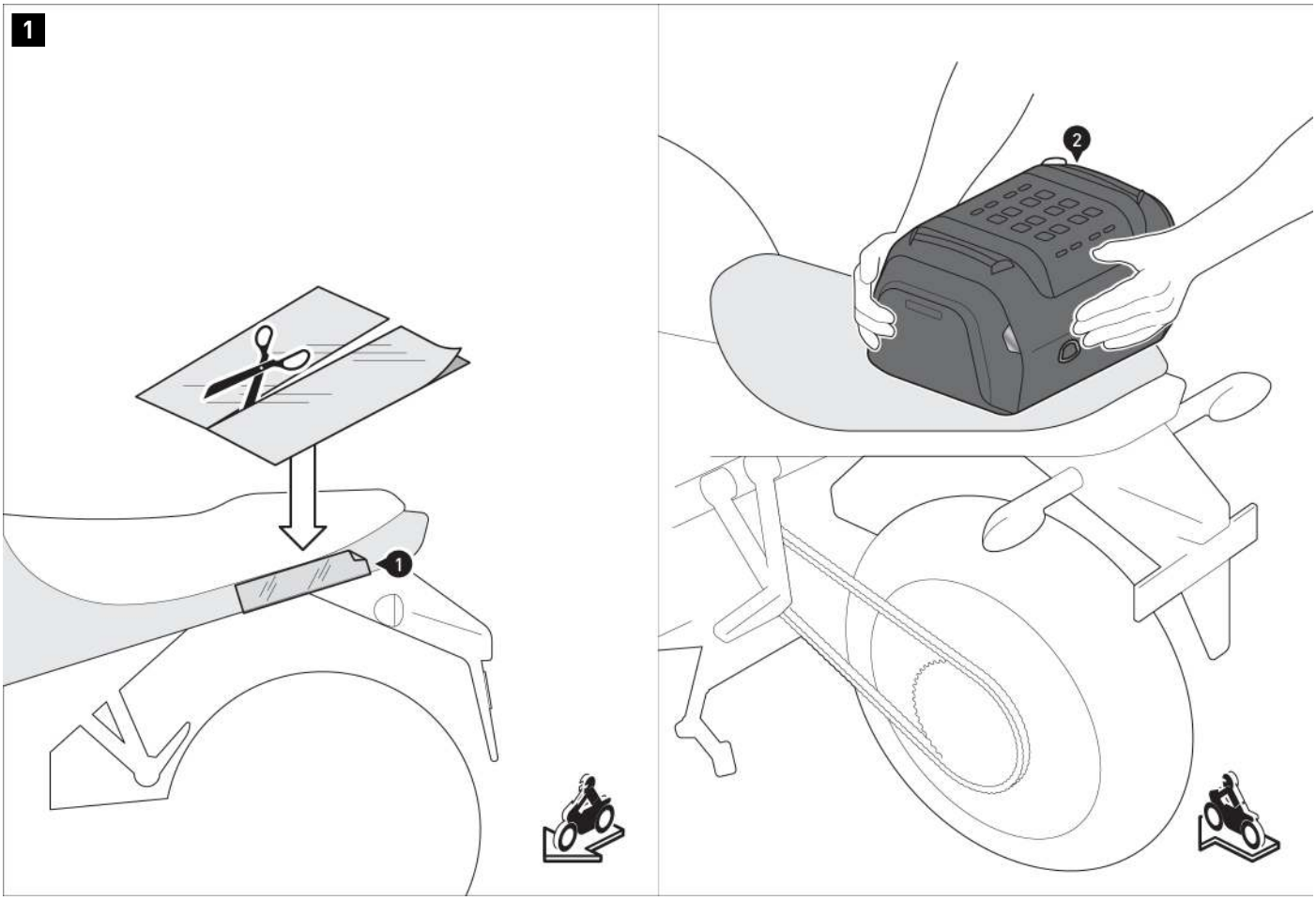

⚠ WARNING: Always wear eye and hand protection!
⚠ WARNING: Always use suitable tools!

Thoroughly clean the bonding surface to remove grease and dirt residues. Apply the protective adhesive foil (1) to **BOTH SIDES** of the tail bag (2).

Then position the tail bag (2).

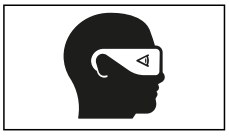

The content translation is automated.
© SW-MOTECH GmbH & Co. KG

Errors and omissions excepted
Subject to technical and design changes.

2

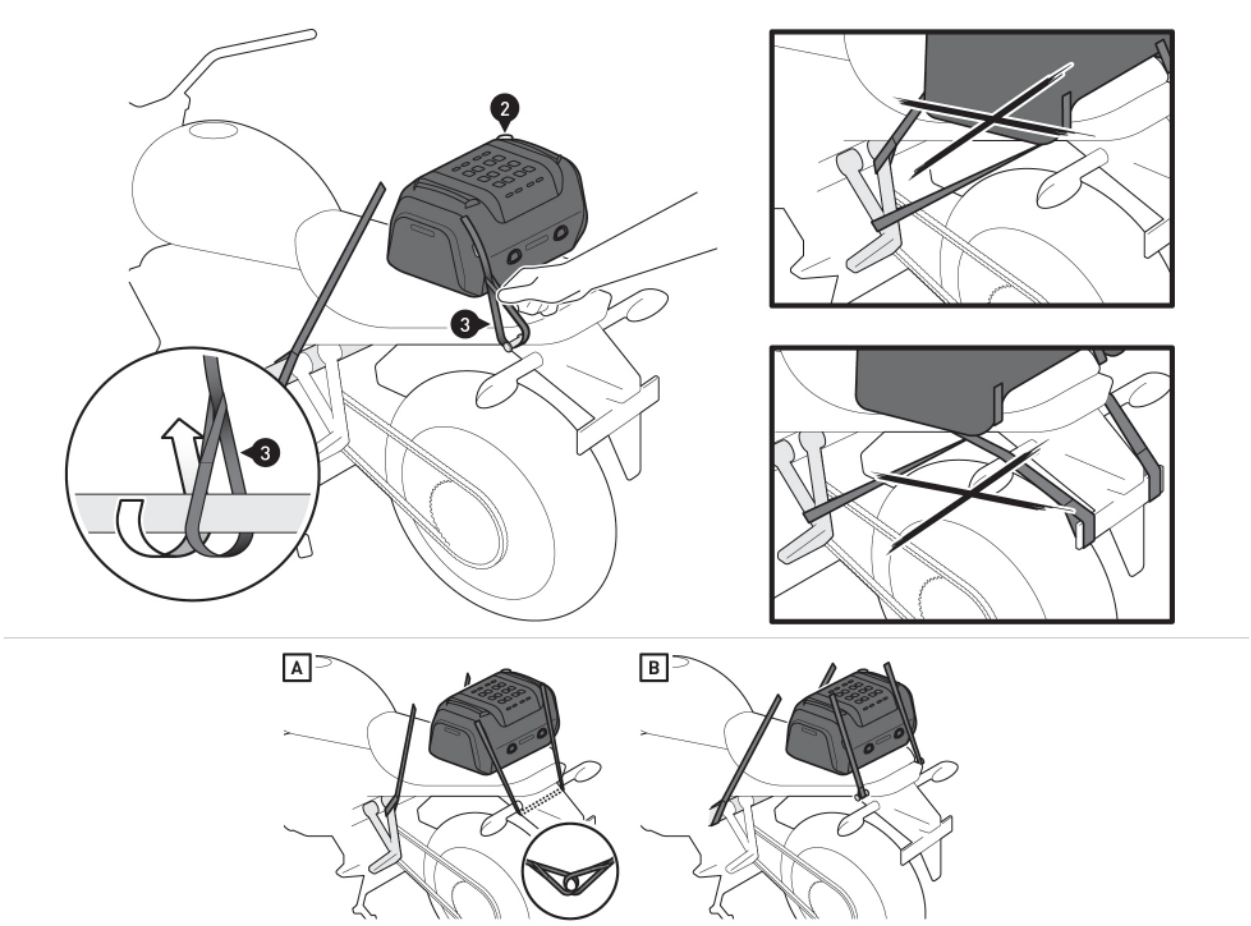

Loop the fastening straps (3) to **FOUR** suitable and strong fastening points on the bike (e.g. footrest mount, vehicle frame, luggage hook). See examples [A] and [B].

⚠ WARNING: The attachment points must be selected so that therear bag (2) is secured against slipping. To do this, tension the tail bag (2) forwards at the two front fastening points and backwards at the two rear fastening points.

© SW-MOTECH GmbH & Co. KG

Errors and omissions excepted
Subject to technical and design changes.

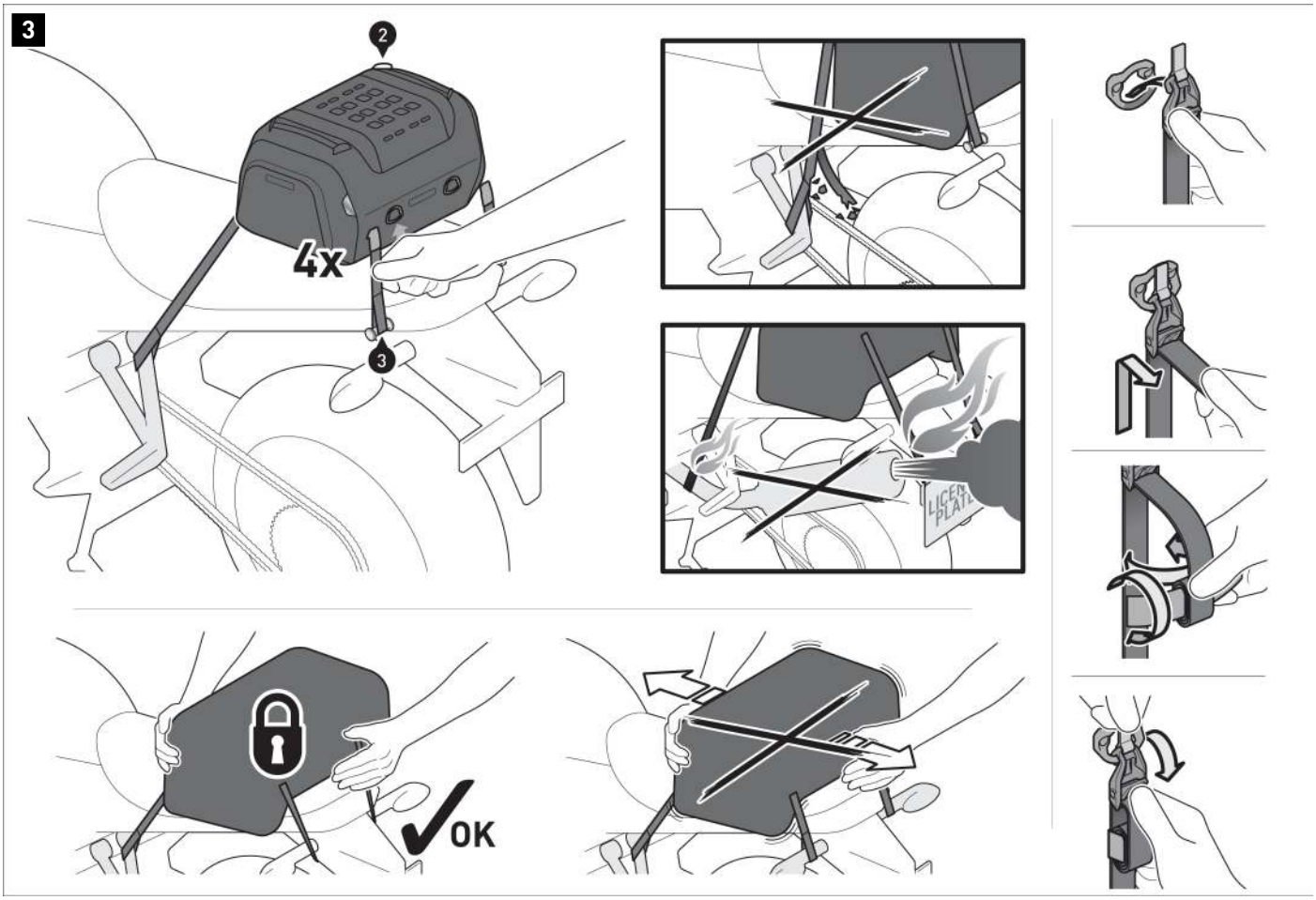

Hook the lashing hooks on the **FOUR** loop straps (3) onto the tail bag's (2) lashing eyelets.
Tighten the loop straps (3) on all four lashing hooks until the tail bag (2) is centred and firmly attached to the bike.
Roll up the excess length of the fastening straps (3), and secure them with the Velcro strips.

⚠ WARNING: Make sure that no components of the tail bag come into contact with hot and moving parts of the vehicle.
Also ensure that all components are at least 5 cm away from hot parts as well as from the hot exhaust stream of the exhaust system.
After installation, make sure that thisdistance is maintained in every suspension condition of the vehicle.

⚠ WARNING:Check that the tail bag (2) is firmly seated before setting off and at every rest stop (around every 200 km.

© SW-MOTECH GmbH & Co. KG

Errors and omissions excepted
Subject to technical and design changes.

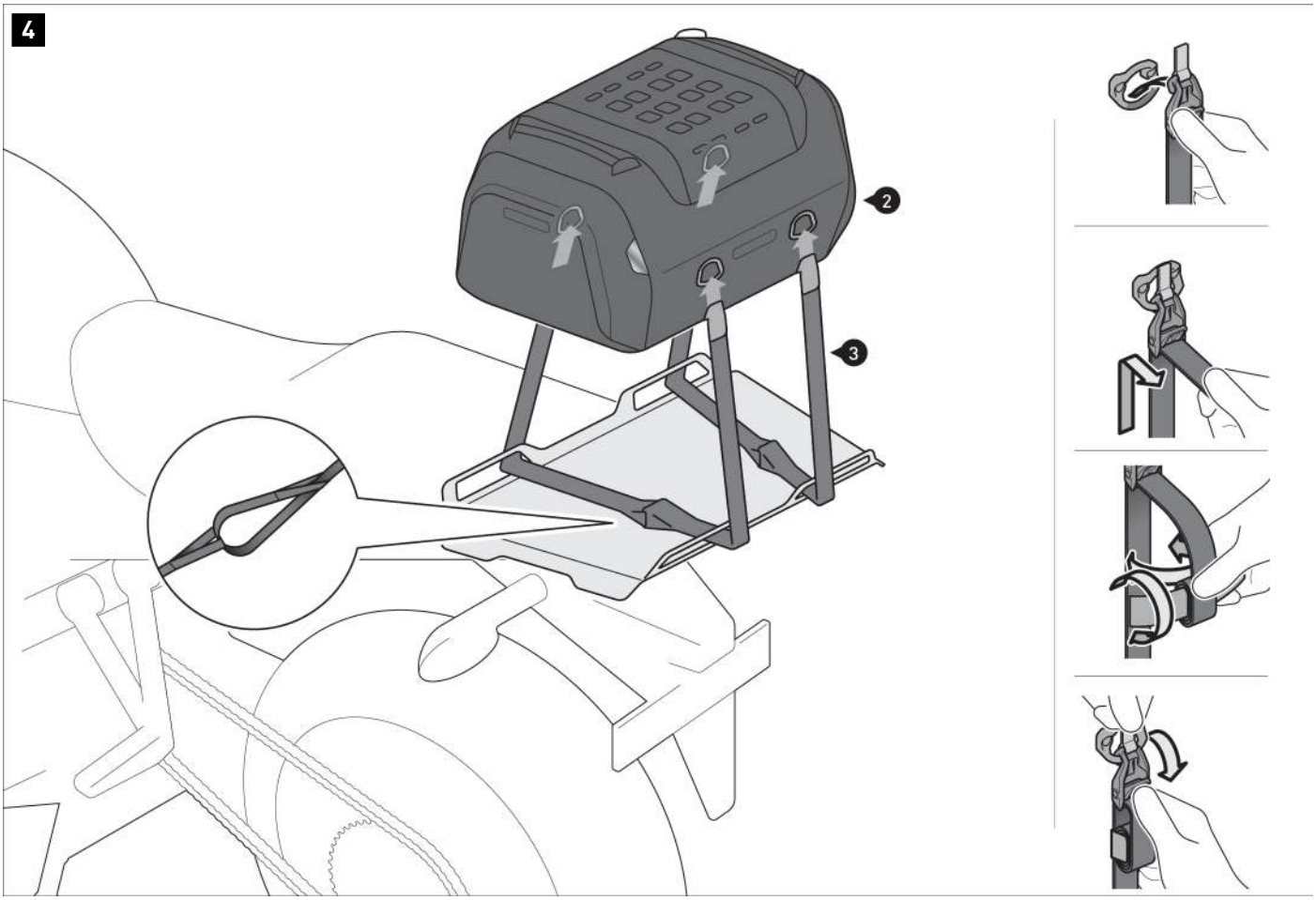

MOUNTING ON THE LUGGAGE RACK EXTENSION

Interloop two strap loops (3) with each other.

Guide the loop straps (3) through the openings shown on the example luggage carrier extension.
Hook the lashing hooks of the loop straps (3) onto the lashing eyes of the tail bag (2).
Tighten the loop straps (3) on all four lashing hooks.
Roll up the excess length of the loop straps (3), and secure them with Velcro strips.

© SW-MOTECH GmbH & Co. KG

Errors and omissions excepted
Subject to technical and design changes.

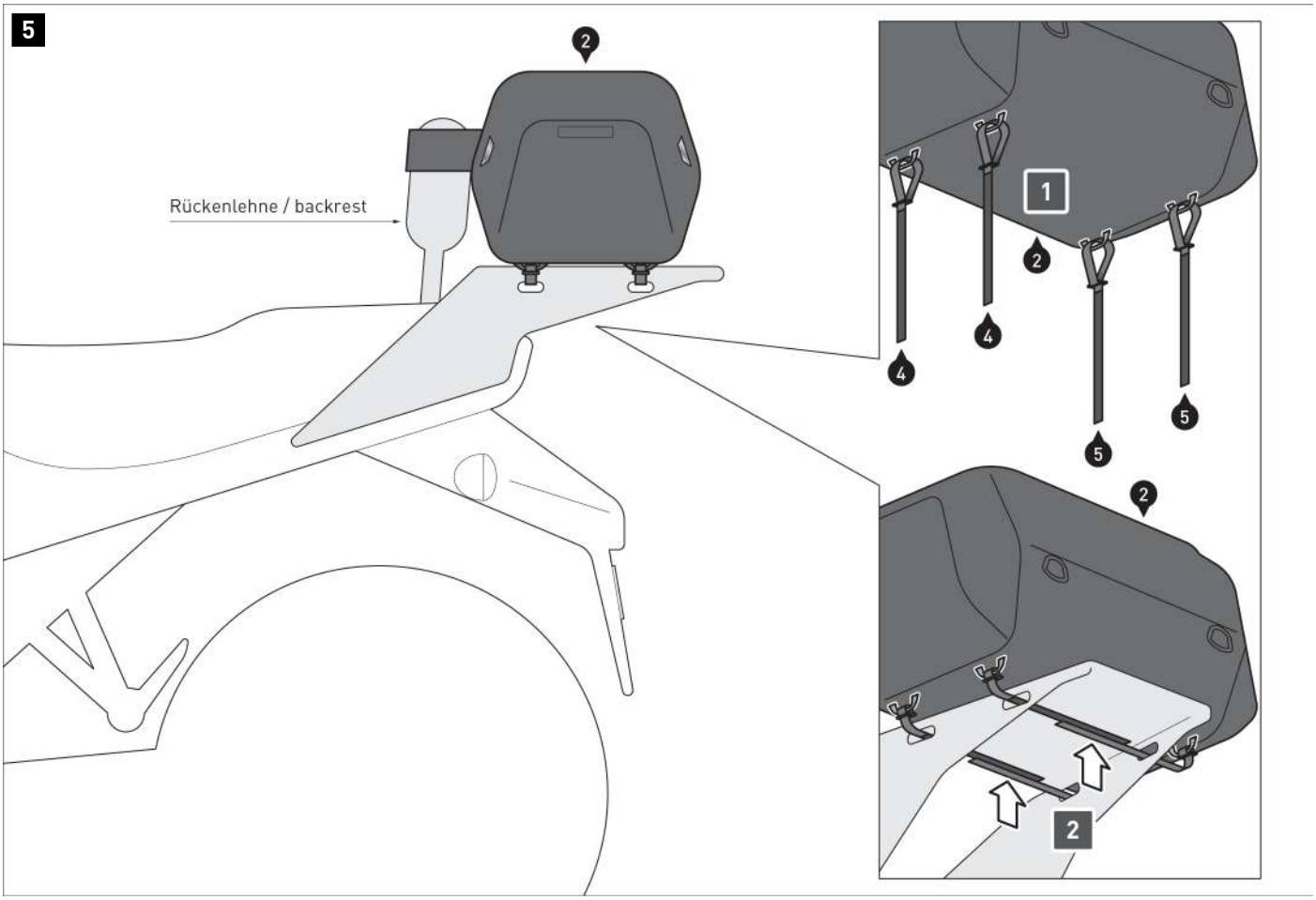

MOUNTING ON THE LUGGAGE RACK

Attach the Velcro straps (4) and (5) to the loops at the bottom of the tail bag (2). Make sure that the loop and hook sides can be easily attached. Place the tail bag on the luggage rack.

Fix the tail bag (2) to the luggage rack using the Velcro straps (4) and (5). Make sure that the tail bag (2) is attached in such a way that it cannot slip while riding.

⚠ ***NOTE:*** *The Velcro strap sewn on the front can be looped around the backrest for additional support.*

© SW-MOTECH GmbH & Co. KG

Errors and omissions excepted
Subject to technical and design changes.

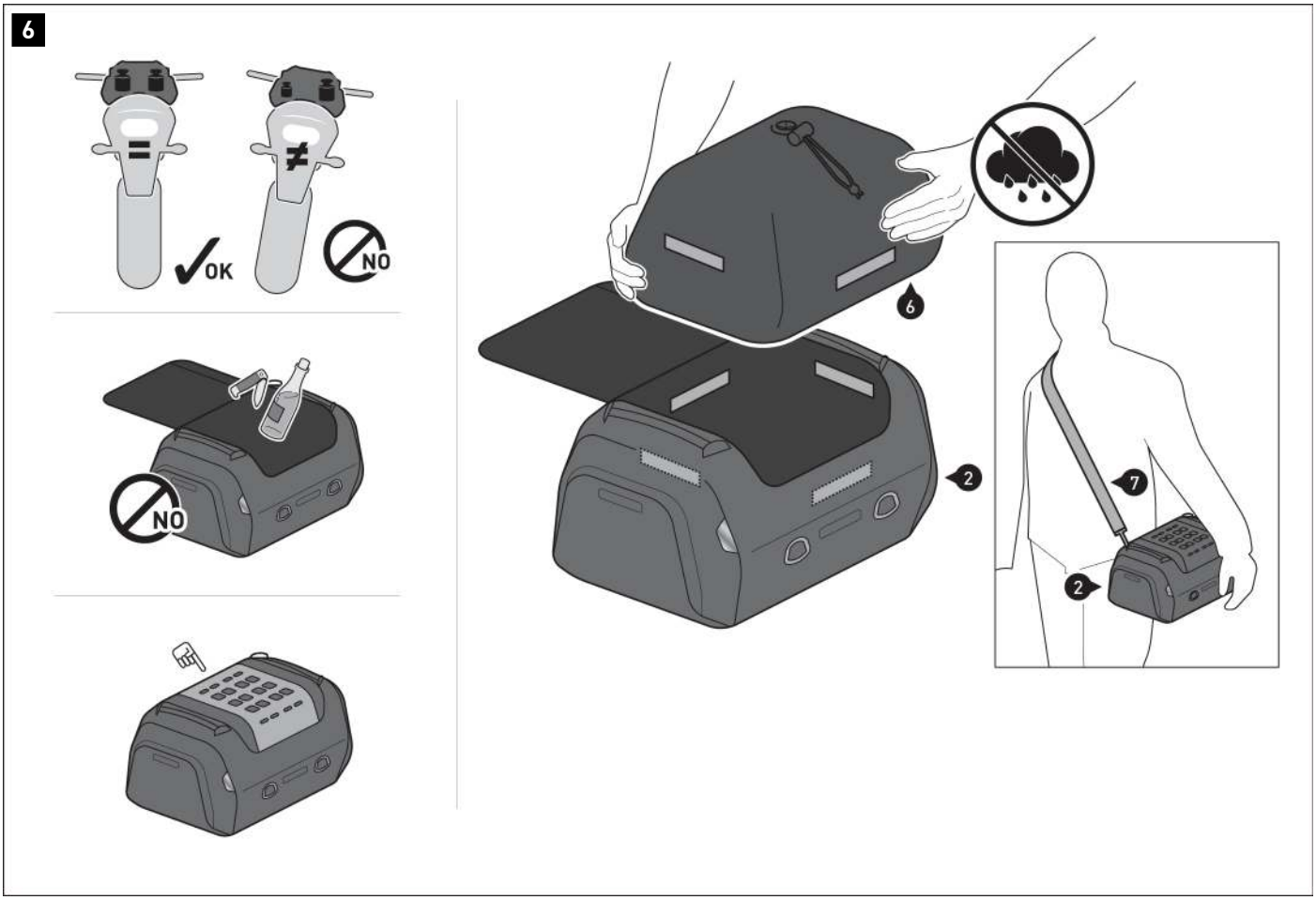

LOADING

⚠ ***NOTE:*** *Ensure that the load is evenly distributed! Make sure that the load is secured against slipping while riding.*

⚠ ***NOTE:*** *Make sure that you never store sharp-edged, pointed, or similar objects that could cause injury to persons or damage to the bike or the tail bag.*

⚠ ***NOTE:*** *Always use the enclosed waterproof inner bag (6) to protect your luggage from moisture.*

⚠ ***NOTE:*** *Attach only the designated SW-MOTECH products to the MOLLE system.*

Attach the waterproof inner bag (6) to the Velcro strips on the inside.

Additionally protect sensitive luggage (e.g. electronic devices) from moisture with a plastic bag.

⚠ **WARNING: Maximum load is 10 kg.**

© SW-MOTECH GmbH & Co. KG

Errors and omissions excepted
Subject to technical and design changes.

7

CARE

For cleaning, use **ONLY** a soft textile brush, a cloth or a sponge and warm soapy water! Then rinse with clean water.

DO NOT use harsh cleaning agents, abrasive cleaning utensils or high-pressure cleaners! Be sure to clean the tail bag after winter rides to avoid damage caused by salt.

⚠ ***NOTE:*** *Surface materials may be damaged by prolonged and intensivesolar radiation and environmental influences (e.g. smog, acid rain) Subject to colour changes (fading). SW-MOTECH assumes no liability for this.*

The content translation is automated.
© SW-MOTECH GmbH & Co. KG

Errors and omissions excepted
Subject to technical and design changes.

PRODUCT-SPECIFIC NOTES

⚠ ***NOTE:*** *Observe the country-specific regulations for the registration/operation of your vehicle and any applicable TÜV regulations. Have any parts requiring registration entered in the vehicle documents by your inspection centre after they have been installed.*

⚠ DANGER: Since this is a universal product, please be sure to check that the product can be properly and correctly attached to and used on your vehicle model before using it for the first time! After mounting, check that all vehicle components are unobstructed and can function properly! Lights such as taillights and turn light indicators must not be impeded in their function! Cables, wires, and hoses should not rub and/or squeeze against anything!

⚠ DANGER: Carry out a comprehensive check to ensure everything functions properly before departure!

⚠ DANGER: Ensure that the product is properly positioned before departure and at every rest stop (every 200 km)!

⚠ DANGER: The driving/braking behavior of the motorcycle changes noticeably after mounting this product!

⚠ DANGER: Lean angle and ground clearance may be restricted by this product!

⚠ DANGER: The maximum vehicle load specified by the vehicle manufacturer remains applicable!

see LOAD	≤ 130km/h (≤ 80mph)

© SW-MOTECH GmbH & Co. KG

Errors and omissions excepted
Subject to technical and design changes.

Art.-Nr. / Item No.: **BC.HTA.00.305.3000***

Revision: **00** · Datum / Date: **09 - 2020**

PRO Rackpack Hecktasche

PRO Rackpack tail bag

DEUTSCH - Vielen Dank, dass Sie sich für dieses Premium-Produkt von SW-MOTECH entschieden haben. Bitte besuchen Sie unseren Webshop für weitere Informationen wie Modellzuweisungen und PDF-Anbauanleitung. Erforderliche Dokumente (z. B. ABE) stehen als Download zur Verfügung.

Die Montage und/oder Wartung dieses Produkts erfordert ein gutes technisches Verständnis! Zu Ihrer eigenen Sicherheit empfiehlt SW-MOTECH, die Montage und/oder Wartung durch eine Fachwerkstatt durchführen zu lassen! SW-MOTECH übernimmt keine Haftung für Schäden, die durch eine unsachgemäße Montage und/oder Wartung verursacht wurden!
Beachten Sie alle in der Anbauanleitung angegebenen Hinweise und die für die Montage relevanten Informationen im Fahrzeughandbuch. Nichtbeachtung kann zu Schäden am Fahrzeug bzw. zur Gefährdung des Fahrers führen! Diese Anbauanleitung ist nach unserem derzeitigen Kenntnisstand verfasst worden. Rechtliche Ansprüche auf Richtigkeit bestehen nicht.

Dieses Produkt wurde für Fahrzeuge im Werkszustand entwickelt. Die Kompatibilität mit Original-Zubehörteilen bzw. den Zubehörteilen anderer Hersteller kann nicht gewährleistet werden. Stellen Sie des Weiteren VOR Montage dieses Produkts sicher, dass sich alle beweglichen Teile (z. B. die Kette) im ursprünglichen Wartungszustand befinden. Montiertes Zubehör kann das Fahrverhalten und/oder die Stabilität Ihres Fahrzeugs verändern.

ENGLISH - Thank you for choosing this premium product from SW-MOTECH. Please visit our webshop for additional information, such as application charts and PDF mounting instructions. Any other documents that may be required (e.g. ABE certifications), are also available for download at our webshop.

Installation and/or maintenance of this product require good technical understanding! For your own safety SW-MOTECH recommends having installation and/or servicing carried out by a specialist workshop! SW-MOTECH assumes no liability for damage caused by improper installation and/or maintenance work!
Carefully follow all the directions given in the mounting instructions and pay attention to all relevant information in the vehicle manual during assembly. Nonconformance can lead to vehicle damage or even endanger the driver! These mounting instructions are written based on our current state of knowledge. Legal requirements for accuracy do not exist.

This product was developed for vehicles in their factory setting. Compatibility with original accessory parts or other manufacturers' accessory parts is not guaranteed. Furthermore, BEFORE installing this product, make sure that all moving parts (e.g. the chain) are in the original state of maintenance. Installed accessories can change the driving behaviour and/or stability of your vehicle.

ALLGEMEINE HINWEISE

Beachten Sie die landesspezifischen Vorschriften für Zulassung/Betrieb Ihres Fahrzeugs bzw. anwendbare TÜV-Vorschriften. Lassen Sie eintragungspflichtige Teile nach Montage durch Ihre Prüfstelle in die Fahrzeugpapiere eintragen.

VORBEREITUNG: Lesen Sie die Anbauanleitung aufmerksam und stellen Sie sicher, dass alle Teile der Stückliste vorhanden sind. Achten Sie darauf, dass Ihr Fahrzeug sicher steht und nicht umfallen kann. Schalten Sie den Motor ab und ziehen Sie den Zündschlüssel. Lassen Sie ggf. den Motor/Auspuff abkühlen. Klemmen Sie bei Arbeiten an der Elektrik die Fahrzeugbatterie ab. Verwenden Sie geeignetes Werkzeug. Lassen Sie sich von einer zweiten Person helfen.

FUNKTIONSKONTROLLE: Da es sich um ein universelles Produkt handelt, stellen Sie unbedingt VOR der ersten Nutzung sicher, dass sich das Produkt ohne Probleme und sachgerecht an Ihrem Fahrzeugtyp befestigen und verwenden lässt. Prüfen Sie nach der Befestigung die uneingeschränkte Freigängigkeit und einwandfreie Funktion aller Fahrzeugteile. Leuchtmittel wie Rücklicht und Blinker dürfen nicht in ihrer Funktion eingeschränkt werden. Kabel, Züge und Schläuche dürfen nicht scheuern und/oder geklemmt werden. Führen Sie vor Fahrtbeginn eine umfassende Funktionskontrolle durch. **Stellen Sie sicher, dass keine Komponente des Produkts mit heißen und beweglichen Teilen des Fahrzeugs in Berührung kommen kann. Achten Sie darauf, dass alle Komponenten mindestens 5 cm Abstand zu heißen Teilen sowie dem heißen Abgasstrom des Auspuffs haben. Federn Sie zu diesem Zweck nach der Montage das Fahrzeug mehrere Male im Stand voll durch. ACHTUNG: Überprüfen Sie vor Fahrtbeginn und bei jeder Rast (alle 200 km) den ordnungsgemäßen Sitz des Produkts!**

GENERAL INFORMATION

Observe the country-specific regulations concerning vehicle registration/operation as well as TÜV regulations if applicable. If required, register installed parts in the vehicle documents through an appropriate inspection authority.

PREPARATION: Read the mounting instructions carefully and make sure that all items of the parts list are included. Make sure that your vehicle is parked safely and cannot fall over. Turn off the engine and remove the ignition key. Let the motor/exhaust cool off if necessary. Disconnect the vehicle battery when working on the electrical system. Use appropriate tools. Have another person to help you.

FUNCTION CHECK: This is a universal product. For this reason make sure BEFORE the first use, that the product can be fixed properly and used without problems with your vehicle type. After fixation also make sure that no moving parts are obstructed and the function of the vehicle is not hindered in any way. Lamps as taillight and turn signals must not be limited in their function. Cables and hoses must not rub and/or be pinched. Before starting to ride, perform a comprehensive check of all functions.
All components of the product must not contact any hot or moving parts of the vehicle. All parts should also remain 5 cm away from hot parts of the vehicle and remain clear of the exhaust stream. For this reason compress the suspension fully several times with your vehicle stationary. ATTENTION: Before riding and at each stop (every 200 km) check proper fixation of the product!

PRODUKTSPEZIFISCHE HINWEISE

ACHTUNG: Das Fahr-/Bremsverhalten des Motorrads verändert sich nach Befestigung dieses Produkts merklich! Die Schräglagen- und Bodenfreiheit kann durch dieses Produkt eingeschränkt werden!

ACHTUNG: Veränderungen führen zum Erlöschen der Garantie.

Maximale Zuladung	Höchstgeschwindigkeit
10 KG (22 lbs)	**130 km/h** (80 mph)

ACHTUNG: Es gilt die vom Fahrzeughersteller genannte maximale Zuladung des Fahrzeugs!

ACHTUNG

NICHT FÜR DEN OFFROAD-EINSATZ GEEIGNET!

PRODUCT SPECIFIC INFORMATION

ATTENTION: Riding with this product may affect the motorcycles driving and braking performance! Cornering and ground clearance can be reduced by using this product!

ATTENTION: Modifications will void any warranty.

Maximum Load	Maximum Speed
10 KG (22 lbs)	**130 km/h** (80 mph)

ATTENTION: The maximum vehicle load specified by the manufacturer must not be exceeded!

ATTENTION

NOT FOR OFFROAD-USE!

Konfektionierung durch / Packed by:	Datum der Konfektionierung / Date of packaging:

SW-MOTECH GmbH & Co. KG
Ernteweg 7-10
35282 Rauschenberg
Germany

Tel. / phone + 49 (0)6425 / 8168 - 050
Fax / fax + 49 (0)6425 / 8168 - 10
info@sw-motech.com
www.sw-motech.com

Copyright by
SW-MOTECH GmbH & Co. KG

Irrtümer und Änderungen vorbehalten. Technische und Design-Änderungen vorbehalten.
Errors and omissions excepted. Technical and design modifications are subject to change.

STÜCKLISTE / PARTS LIST

Schritt Step	Nr. No.	Art.-Nr. / Bezeichnung [a] Item No. / Description [a]	Artikel	Part	Anzahl [b] Quantity [b]	N·m [c]
1 1	(1)		Hecktasche	Tail Bag	1 /1	
	(2)	BC.ZUB.00.122.30000	Wasserdichte Innentasche	Waterproof Innerbag	1 /1	
	(3)	BC.ZUB.00.041.30000	Schultergurt	Shoulder Strap	1 /1	
1	(4)	BC.ZUB.00.128.30000	Verschlaufgurt-Set; 4 Stück	Loop Strap Set; 4 pieces	1 /1	
	(5)	LSF.350.250	Lackschutzfolie; 250 x 350 mm	Protection Foil; 250 x 350 mm	1 /1	
1	(6)	BC.ZUB.00.120.30000	Klettgurt-Set; Schlaufenseite; 2 Stück	Velcro Strap Set; loop side; 2 pieces	1 /1	
	(7)	BC.ZUB.00.121.30000	Klettgurt-Set; Hakenseite; 2 Stück	Velcro Strap Set; hook side; 2 pieces	1 /1	

8.8	Regelgewinde / Coarse Thread Ø	M4	M5	M6	M8	M10	M12
	Stahl FK 8.8 / Steel CL 8.8 N·m	2,8	5,5	9,6	23	46	79

10.9	Regelgewinde / Coarse Thread Ø	M4	M5	M6	M8	M10	M12
	Stahl FK 10.9 / Steel CL 10.9 N·m	4,1	8,1	14	34	67	115

Anmerkungen: [a] Alle Maßangaben in Millimeter. [b] Der zweite Wert gibt die Gesamtanzahl des jew. Artikels in der Lieferung an. [c] **Keine Anzugsmomentvorgabe: Verwenden Sie das vom Fzg.-Hersteller definierte Anzugsmoment!** Das Std.-Anzugsmoment der Tabelle kann verwendet werden, wenn es den Fzg.-Hersteller-Vorgaben entspricht.

Note: [a] All measurements in millimeters. [b] The second number indicates the total quantity of the part in the delivery. [c] **No torque specifications: Use the torque defined by vehicle manufacturer!** The standard torque in this table can be used as long as it is within the vehicle manufacturer's specifications.

Copyright by
SW-MOTECH GmbH & Co. KG

Irrtümer und Änderungen vorbehalten. Technische und Design-Änderungen vorbehalten.
Errors and omissions excepted. Technical and design modifications are subject to change.

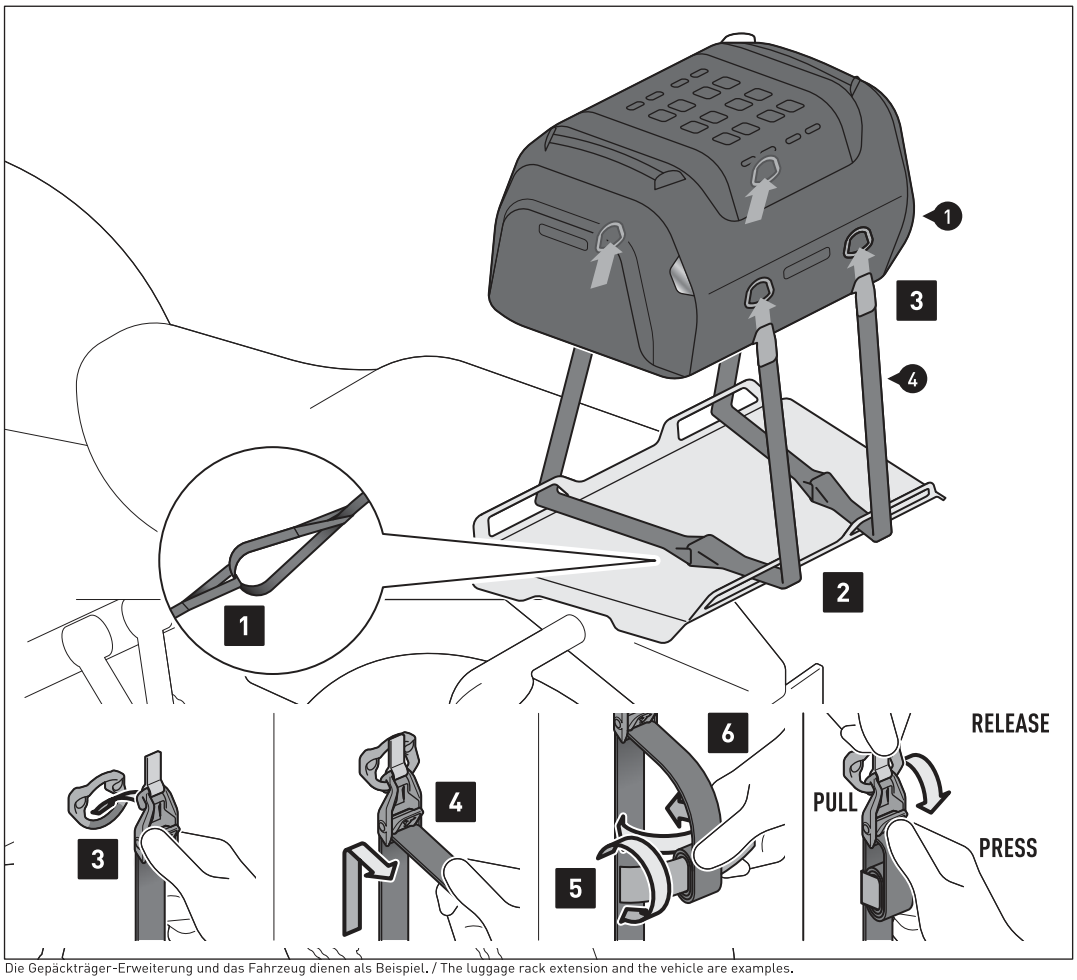

Die Gepäckträger-Erweiterung und das Fahrzeug dienen als Beispiel. / The luggage rack extension and the vehicle are examples.

BEFESTIGUNG AUF DER GEPÄCK-TRÄGER-ERWEITERUNG

Schritt [1]: Verschlaufen Sie je zwei Schlaufgurte (4) miteinander.

Schritt [2]: Führen Sie die Schlaufgurte (4) durch die gezeigten Öffnungen der beispielhaften Gepäckträger-Erweiterung.

Schritt [3]: Haken Sie die Zurrhaken der Schlaufgurte (4) an den Zurrösen der Hecktasche (1) ein.

Schritt [4]: Ziehen Sie die Schlaufgurte (4) an allen vier Zurrhaken stramm.

Schritt [5]: Rollen Sie die Überlängen der Schlaufgurte (4) auf ...

Schritt [6]: ... und fixieren Sie diese mit den Klettstreifen.

FIXED ON THE LUGGAGE RACK EXTENSION

Step [1]: Loop two loop straps (4) together.

Step [2]: Guide the loop straps (4) through the shown openings of the example luggage rack extension.

Step [3]: Hook the cam-hooks of the loop straps (4) onto the D-rings of the tail bag (1).

Step [4]: Pull the loop straps (4) on all four cam-hooks tight.

Step [5]: Roll up the excess lengths of the loop straps (4) ...

Step [6]: ... and fix it with the velcro straps.

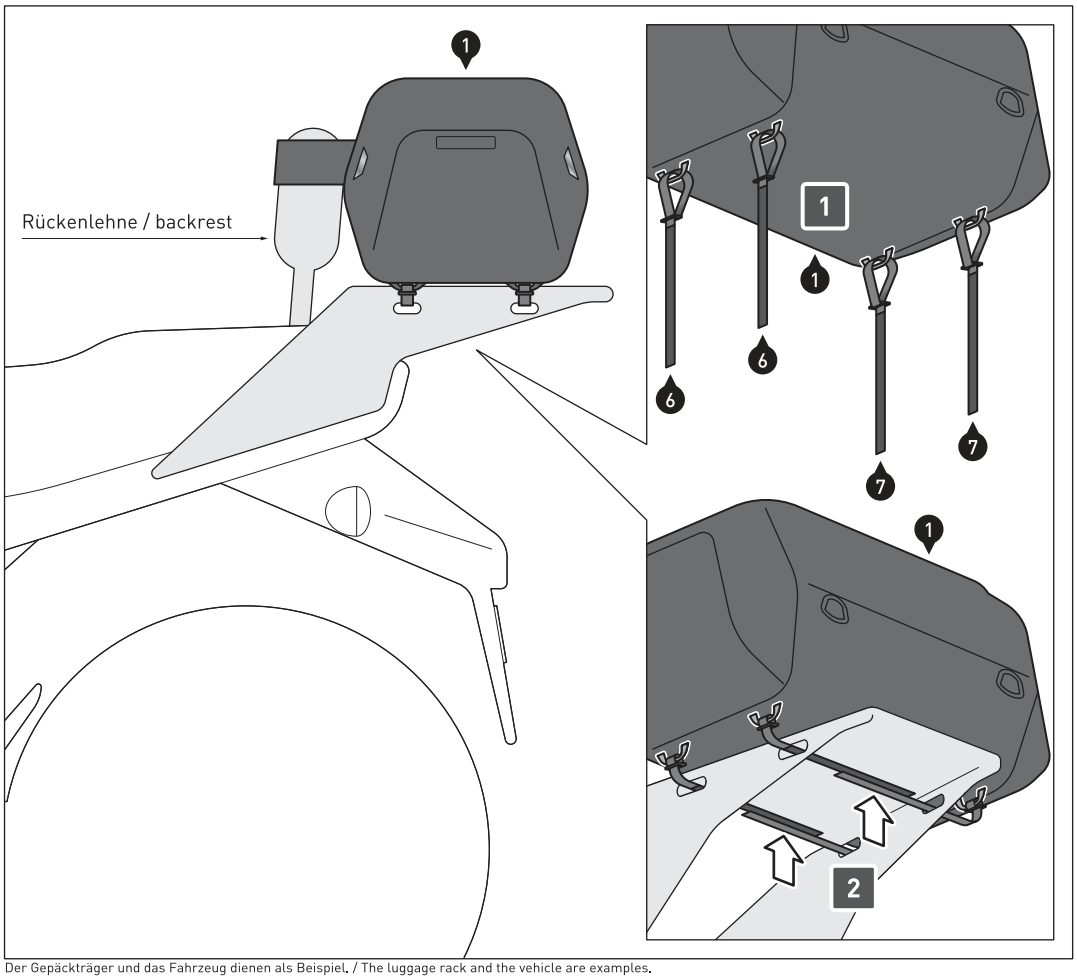

Der Gepäckträger und das Fahrzeug dienen als Beispiel. / The luggage rack and the vehicle are examples.

BEFESTIGUNG AUF DEM GEPÄCK-TRÄGER

Schritt [1]: Verschlaufen Sie die Klettgurte (6) und (7) an den unten angebrachten Schlaufen der Hecktasche (1). Achten Sie darauf, dass die Schlauf- und Hakenseiten sich problemlos verkletten lassen. Platzieren Sie die Hecktasche (1) auf dem Gepäckträger.

Schritt [2]: Fixieren Sie die Hecktasche (1) mit den Klettgurten (6) und (7) an dem Gepäckträger. Achten Sie darauf, dass die Hecktasche (1) so befestigt wird, dass sie nicht während der Fahrt verrutschen kann.

OPTIONAL: Der an der Vorderseite angenähte Klettgurt kann um die Rückenlehne geschlungen werden, um zusätzlichen Halt zu schaffen.

FASTENING TO THE LUGGAGE RACK

Step [1]: Loop the velcro straps (6) and (7) onto the loop at the bottom of the tail bag (1). Make sure that the loop and hook sides can be easily attached.
Place the tail bag (1) on the luggage rack.

Step [2]: Fasten the tail bag (1) to your luggage rack with the velcro straps (6) and (7). Make sure that the tail bag (1) is fastened in such a way that it cannot slip while driving.

OPTIONAL: The velcro strap sewn on the front can be looped around the backrest to provide additional support.

Copyright by
SW-MOTECH GmbH & Co. KG

Irrtümer und Änderungen vorbehalten. Technische und Design-Änderungen vorbehalten.
Errors and omissions excepted. Technical and design modifications are subject to change.

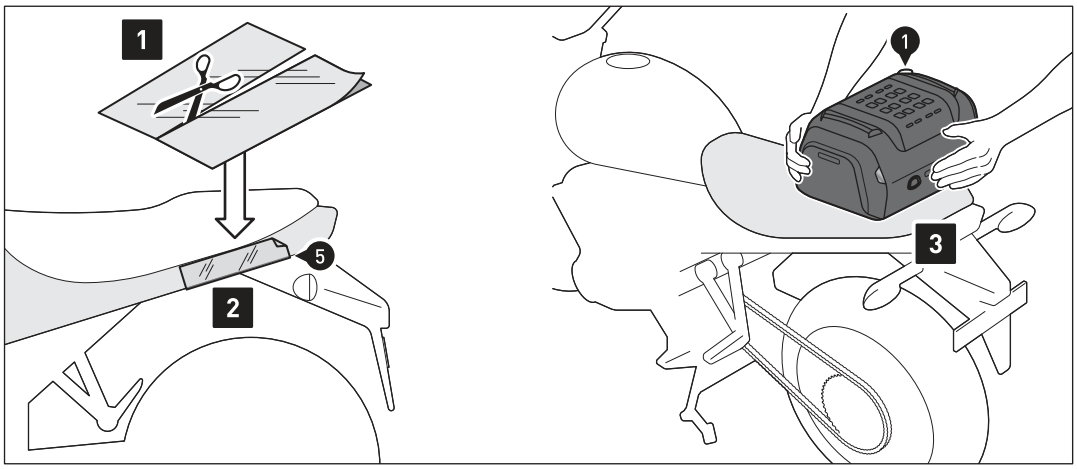

UNIVERSELLE BEFESTIGUNG:
Schritt [1] & [2]: Bekleben Sie die Auflageflächen der Hecktasche (1) mit der Lackschutzfolie (5). Reinigen Sie die Fläche vor dem Aufkleben der Lackschutzfolie gründlich.

Schritt [3]: Platzieren Sie die Hecktasche (1) auf dem Heck des Fahrzeugs.

UNIVERSAL FASTENING:
Step [1] & [2]: Cover the contact surfaces of the tail bag (1) with the protection foil (5). Clean the surface before applying the protection foil.

Step [3]: Place the tail bag (1) on the rear of the vehicle.

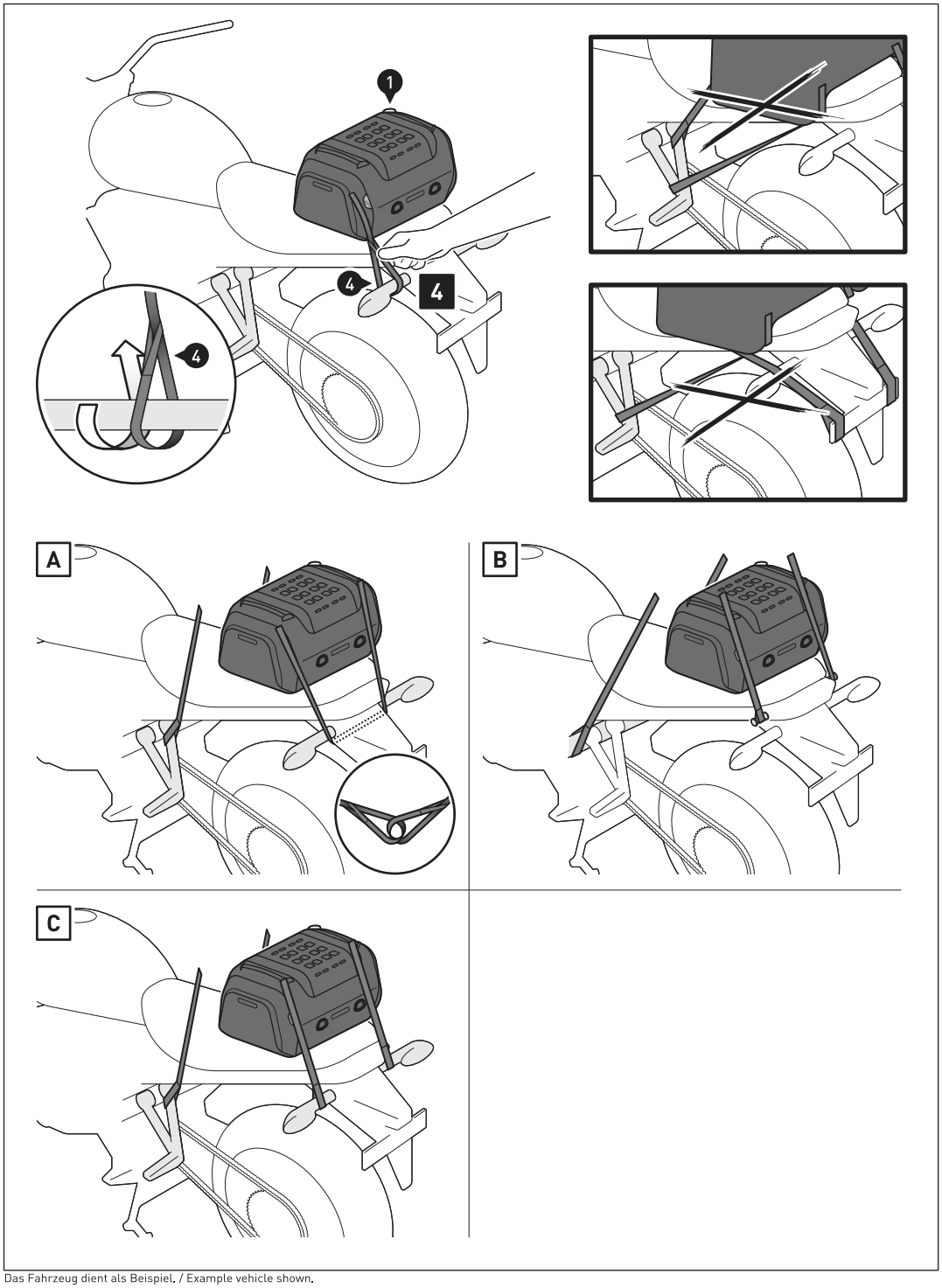

Schritt [4]: Verschlaufen Sie die Schlaufgurte (4) an **VIER** geeigneten und belastbaren Befestigungspunkten am Fahrzeug, wie in den Beispielzeichnungen **[A]** bis **[C]** gezeigt (z. B. Fußrastenaufnahme, Fahrzeugrahmen, Gepäckhaken etc.).
ACHTUNG: Die Befestigungspunkte müssen so gewählt werden, dass die Hecktasche (1) gegen Verrutschen gesichert ist! Spannen Sie dazu die Hecktasche (1) an den beiden vorderen Befestigungspunkten nach vorne ab und an den beiden hinteren Befestigungspunkten nach hinten ab!

Step [4]: Entangle the loop straps (4) to **FOUR** suitable and loadable fastening points to the vehicle, as shown in the example illustrations **[A]** to **[C]** (e.g. vehicles frame, footrest mounts, luggage hook etc.).
ATTENTION: The fastening points must be chosen so that the tail bag (1) is secured against slipping! To do this, tension the tail bag (1) to the front at the two front fastening points and to the rear at the two rear fastening points!

Das Fahrzeug dient als Beispiel. / Example vehicle shown.

Copyright by
SW-MOTECH GmbH & Co. KG

Irrtümer und Änderungen vorbehalten. Technische und Design-Änderungen vorbehalten.
Errors and omissions excepted. Technical and design modifications are subject to change.

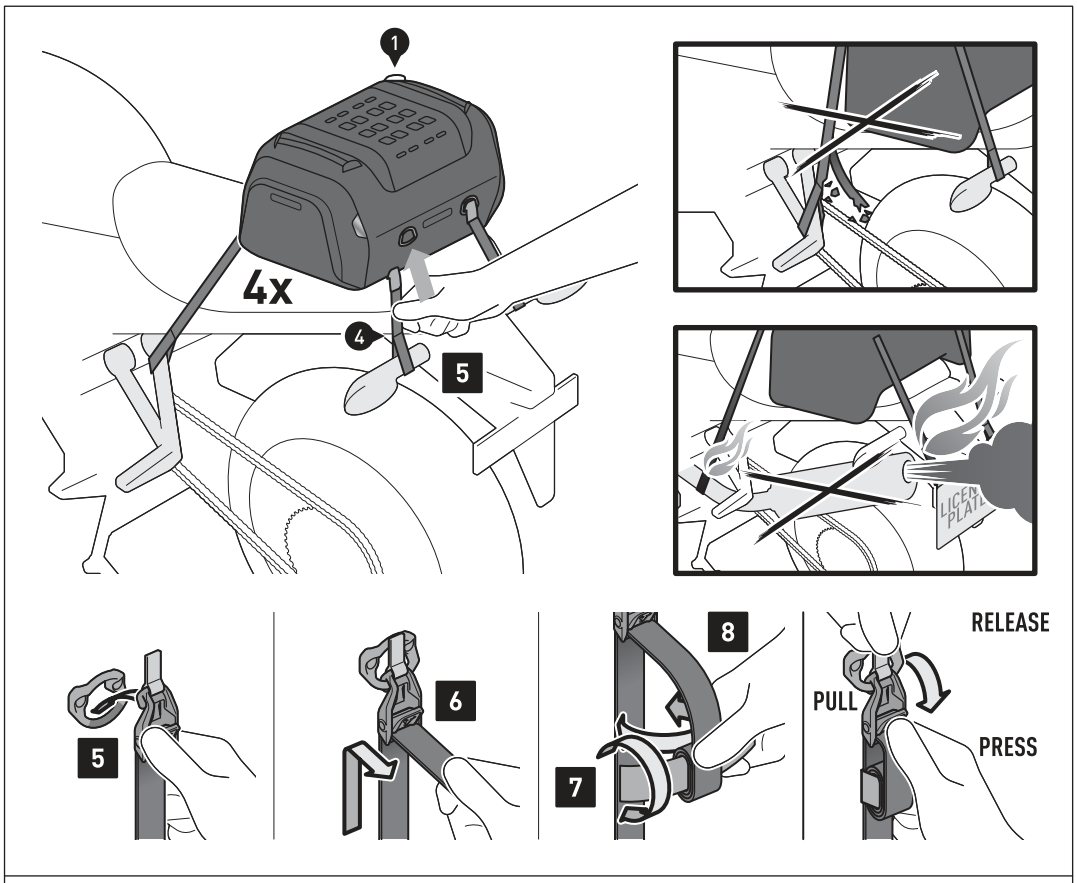

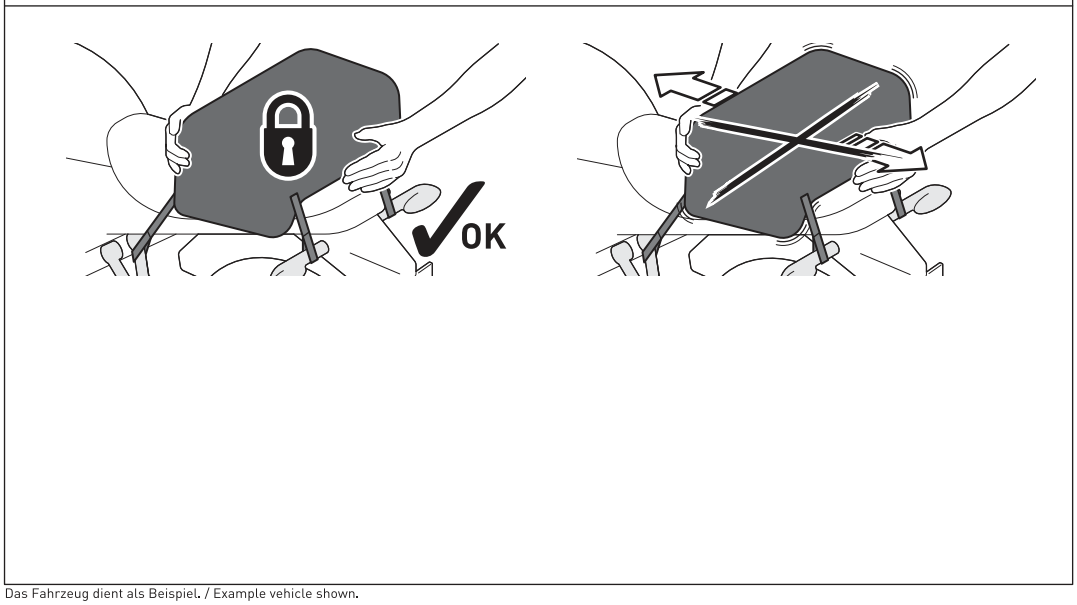

Das Fahrzeug dient als Beispiel. / Example vehicle shown.

Schritt [5]: Haken Sie die Zurrhaken der **VIER** Schlaufgurte (4) an den Zurrösen der Hecktasche (1) ein.

Schritt [6]: Ziehen Sie die Schlaufgurte (4) an allen vier Zurrhaken stramm, bis die Hecktasche (1) zentriert und fest am Fahrzeug befestigt ist.

Schritt [7]: Rollen Sie die Überlängen der Schlaufgurte (4) auf ...

Schritt [8]: ... und fixieren Sie diese mit den Klettstreifen.

ACHTUNG: Stellen Sie sicher, dass keine Komponente der Hecktasche mit heißen und beweglichen Teilen des Fahrzeugs in Berührung kommen kann! Achten Sie darauf, dass alle Komponenten mindestens 5 cm Abstand zu heißen Teilen sowie dem heißen Abgasstrom des Auspuffs haben!

ALLE BEFESTIGUNGSMÖGLICHKEITEN

ACHTUNG: Überprüfen Sie vor Fahrtbeginn und bei jeder Rast (alle 200 km) den ordnungsgemäßen Sitz der Hecktasche (1)!

Step [5]: Hook the cam-hooks of the **FOUR** loop straps (4) onto the D-rings of the tail bag (1).

Step [6]: Pull the loop straps (4) on all four cam-hooks tight until the tail bag (1) is centered and securely fastened to the vehicle.

Step [7]: Roll up the excess lengths of the loop straps (4) ...

Step [8]: ... and fix it with the velcro straps.

ATTENTION: All components of the tail bag must not contact any hot or moving parts of the vehicle. All parts should also remain 5 cm away from hot parts of the vehicle and remain clear of the exhaust stream.

ALL FASTENING POSSIBILITIES

ATTENTION: Before riding and at each stop (every 200 km) check the proper fixation of the tail bag (1)!

Copyright by
SW-MOTECH GmbH & Co. KG

Irrtümer und Änderungen vorbehalten. Technische und Design-Änderungen vorbehalten.
Errors and omissions excepted. Technical and design modifications are subject to change.

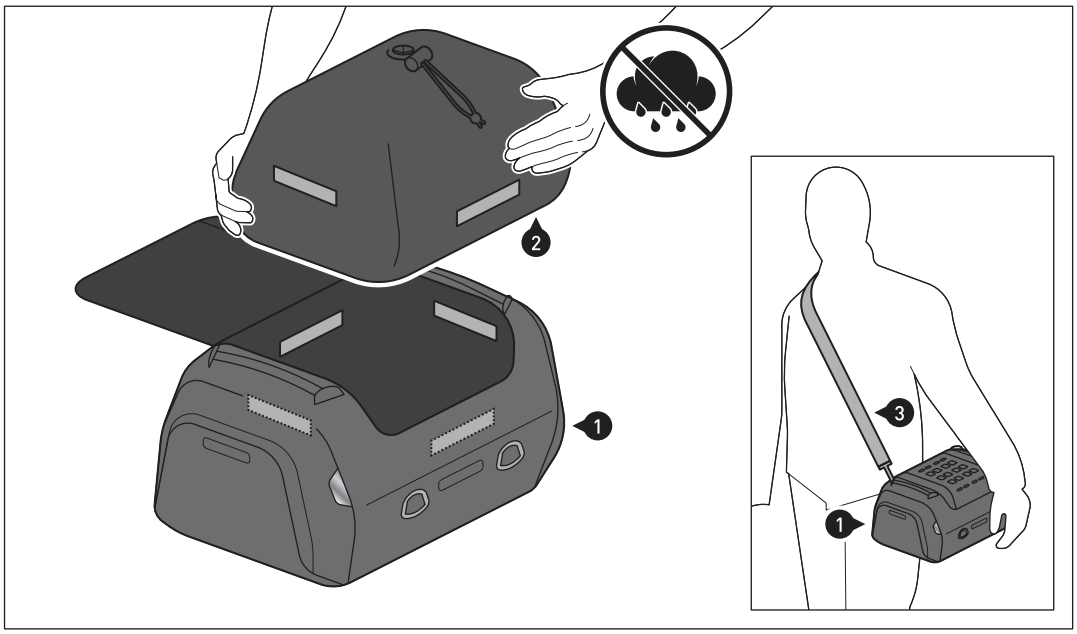

ACHTUNG: Verwenden Sie immer die beiliegende wasserdichte Innentasche (2), um Ihr Gepäck vor Feuchtigkeit zu schützen!

Verkletten Sie die wasserdichte Innentasche (2) innenseitig an dem Klettverschluss.
Schützen Sie empfindliches Gepäck (z. B. elektronische Geräte) zusätzlich mit einer Plastiktüte vor Feuchtigkeit.

ATTENTION: Always use the included waterproof innerbag (2) to protect your luggage from moisture!

Fasten the waterproof inner bag (2) to the velcro patch on the inside. Additionally protect sensitive luggage (e.g., electronic equipment) from moisture with a plastic bag.

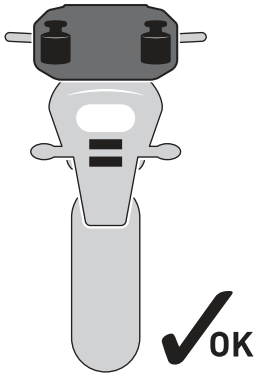

ACHTUNG: Achten Sie auf die gleichmäßige Verteilung der Ladung! Stellen Sie sicher, dass die Ladung während der Fahrt gegen Verrutschen gesichert ist!

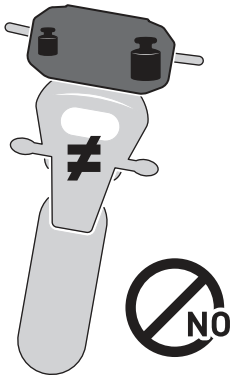

ATTENTION: Make sure weight is evenly distributed! Make sure that the loanding is secured against shifting during the ride!

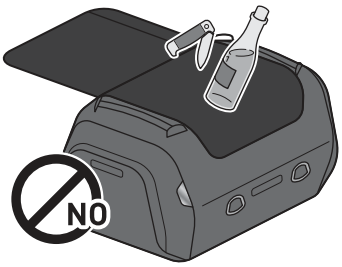

MOLLE-Aufsatz
MOLLE attachment

BELADUNG: Achten Sie darauf, niemals scharfkantige, spitze oder ähnliche Gegenstände zu verstauen, welche Verletzungen an Personen bzw. Beschädigungen am Fahrzeug/Produkt verursachen könnten!
Auf dem MOLLE-Aufsatz NUR zugewiesene SW-MOTECH-Produkte verschlaufen!

LOADING: Never store pointy or sharp-edged objects, which could cause injury to persons or damage to the vehicle/product!
ONLY loop assigned SW-MOTECH products to the MOLLE attachment!

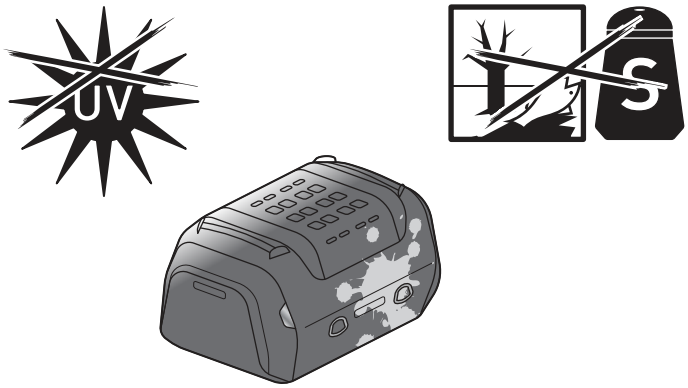

ACHTUNG: Oberflächenmaterialien können bei längerer und intensiver Sonneneinstrahlung und Umwelteinflüssen (z. B. SMOG, saurer Regen, etc.) Farbveränderungen (Ausbleichen) unterliegen! Dafür übernimmt SW-MOTECH keine Haftung.

ATTENTION: Surface materials can experience color changes or fading when exposed to direct sunlight for extended periods of time and by environmental factors (e.g., SMOG, acid rain, etc.)! SW-MOTECH assumes no liability for this.

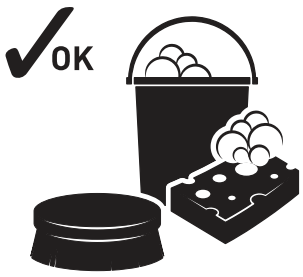

PFLEGE: Verwenden Sie zur Reinigung NUR eine weiche Textilbürste, ein Tuch oder Schwamm und warme Seifenlauge! Spülen Sie anschließend mit klarem Wasser nach.

Verwenden Sie KEINE scharfen Reinigungsmittel, raue Putzutensilien oder einen Hochdruckreiniger! Reinigen Sie das Produkt unbedingt nach Winterfahrten, um Schäden durch das Salz zu vermeiden.

CARE: For cleaning use ONLY a soft textile brush, cloth or sponge and warm soapy water! Rinse with clean water.

Do NOT use strong cleaning agents, rough cleaning tools or high pressure washer!
Clean the product after riding in salty conditions, to avoid damage from salt.

Copyright by
SW-MOTECH GmbH & Co. KG

Irrtümer und Änderungen vorbehalten. Technische und Design-Änderungen vorbehalten.
Errors and omissions excepted. Technical and design modifications are subject to change.